STEP FOUR - Secure Deck Panels to Posts

- Slide bottom channel of pre-cut panel on to lower clips. *(Dia. #6)*
- Insert clips into top channel of panel on each end.
- Using (4) - #8x3/4" Self-tapping screws, attach the upper 2 clips to the post.
- Using (8) - #8x3/4" Self-tapping screws, secure the upper and lower clips to the panel.

Dia. #6

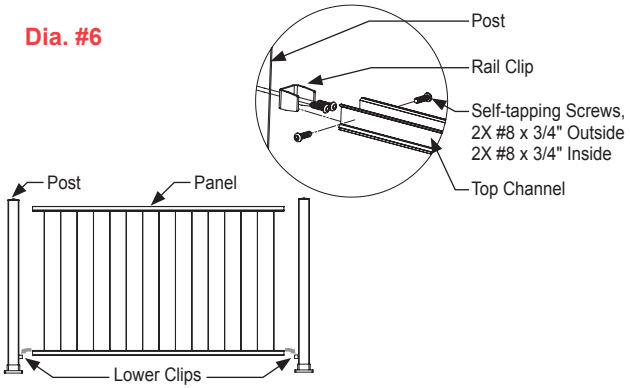

STEP FIVE - Cut and Install Top and Bottom Rail Snaps

- Measure between posts at the top and bottom. *(Dia.#7)*
- Cut top & bottom snap covers 1/16" less than opening.
- Clean cut areas and apply touch-up paint on all exposed metal.
- Snap each rail snap over the corresponding rail channel until properly seated. *(Dia. #8)* **TIP:** If snap will not seat, try installing support leg. Then apply pressure to snap starting from one end.

Dia. #7

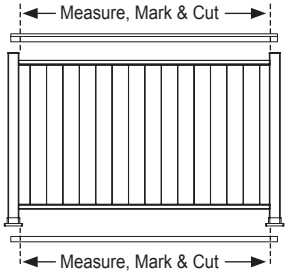

Dia. #8

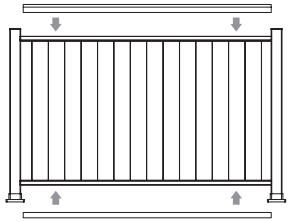

STEP SIX - Install Support Legs

- For openings greater than 4', install support legs under center of bottom rail *(Dia. #9)*
- Slide support leg under bottom rail and mark.
- Install two deck screws at location of support leg, install support leg over screws.
- Using (1) - #8x3/4" color-matched screw, secure the support leg to bottom rail. *(Dia. #10)*

Dia. #9

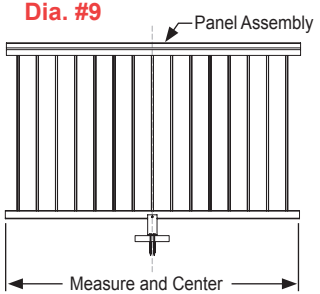

Dia. #10

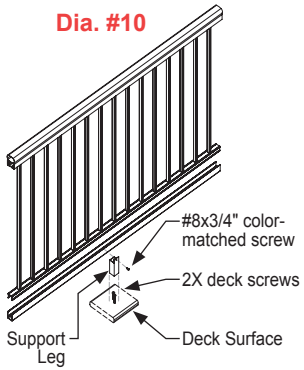

STEP SEVEN - Install Stair Panels

- Hold or temporarily clamp stair panel against posts and adjust for equal end spacing *(Dia. #11)*
- Mark the panel at 4 locations of post connection.
- Miter cut panel at marked locations and place panel in opening. Cut rail 1/16" less than opening.
- Mark posts for location of bottom rail clips.
- Remove panel and install lower clips. *(Dia. #12)*
- Clean cut areas & apply touch-up paint on exposed metal.
- Place cut panel between posts, push rail onto bottom clips, place clips into upper channel, attach clips to post and secure panel to all clips as per Step 4. *(Dia. #6)*
- Miter cut and install top and bottom rails as per Step 5. *(Dia. #7 & #8)*
- See Stair Panel Instructions for more details.

Dia. #11

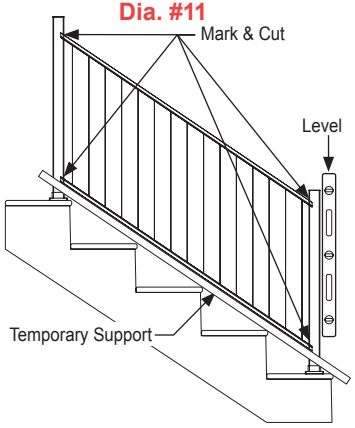

Dia. #12

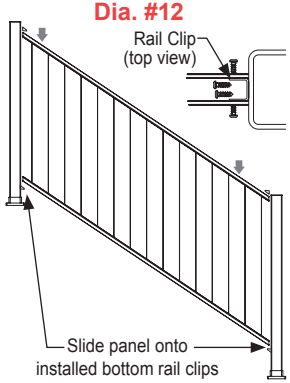

ARIA RAILING®

INSTALLATION INSTRUCTIONS

ALUMINUM BALUSTER RAILING SYSTEM

ITEMS REQUIRED FOR INSTALLATION:

- Post-to-Surface Mounting Screws
- Cordless Drill/Driver
- Pencil
- Safety Glasses
- Miter Saw W/Non-Ferrous Blade
- Level
- Tape Measure
- 6" #2 Square Drive Bit
- 3/16" Drill Bit

IMPORTANT NOTES:

- Do not install base plate covers until railing assembly is completed.
- If installing lighting, wiring must be installed prior to securing posts to deck surface and installing top rail snaps.
- Actual picket panel lengths: 6' Panels = 69.43"; 8' Panels = 91.31".
- 3" posts are required to reach 6' & 8' lengths.
- MAX. POST SPAN ON STAIR RAILING APPLICATIONS IS 70" ON CENTER.
- Stair railing panels are shipped at a 37° angle. Panels are adjustable and will accommodate 30-40° stair angles. **CAUTION:** Over adjusting stair panels will cause loose and rattling pickets.
- 42" post kits are required for middle and bottom stair posts with the 36" railing system.
- 48" post kits are required for middle and bottom stair posts with the 42" railing system.
- 45° deck angles require 22.5°clips applied to each side of the post. The 22.5° clip kit is sold separately.
- Two 3" posts are recommended on top of deck surface if stair riser is not at a 90° angle from deck frame.

It is the responsibility of the installer to meet all local code requirements and obtain all required building permits. The installer should determine and implement appropriate installation techniques for each installation situation. The manufacturer or its reseller shall not be held responsible for improper or unsafe installation.

For other instructions and videos, visit
AriaRailing.com

©2024 Aria Railing®. All Rights Reserved. Version 1.7 - part number WIAC06100

36IN HIGH SYSTEM SHOWN. TOP RAIL PROFILE MAY VARY.

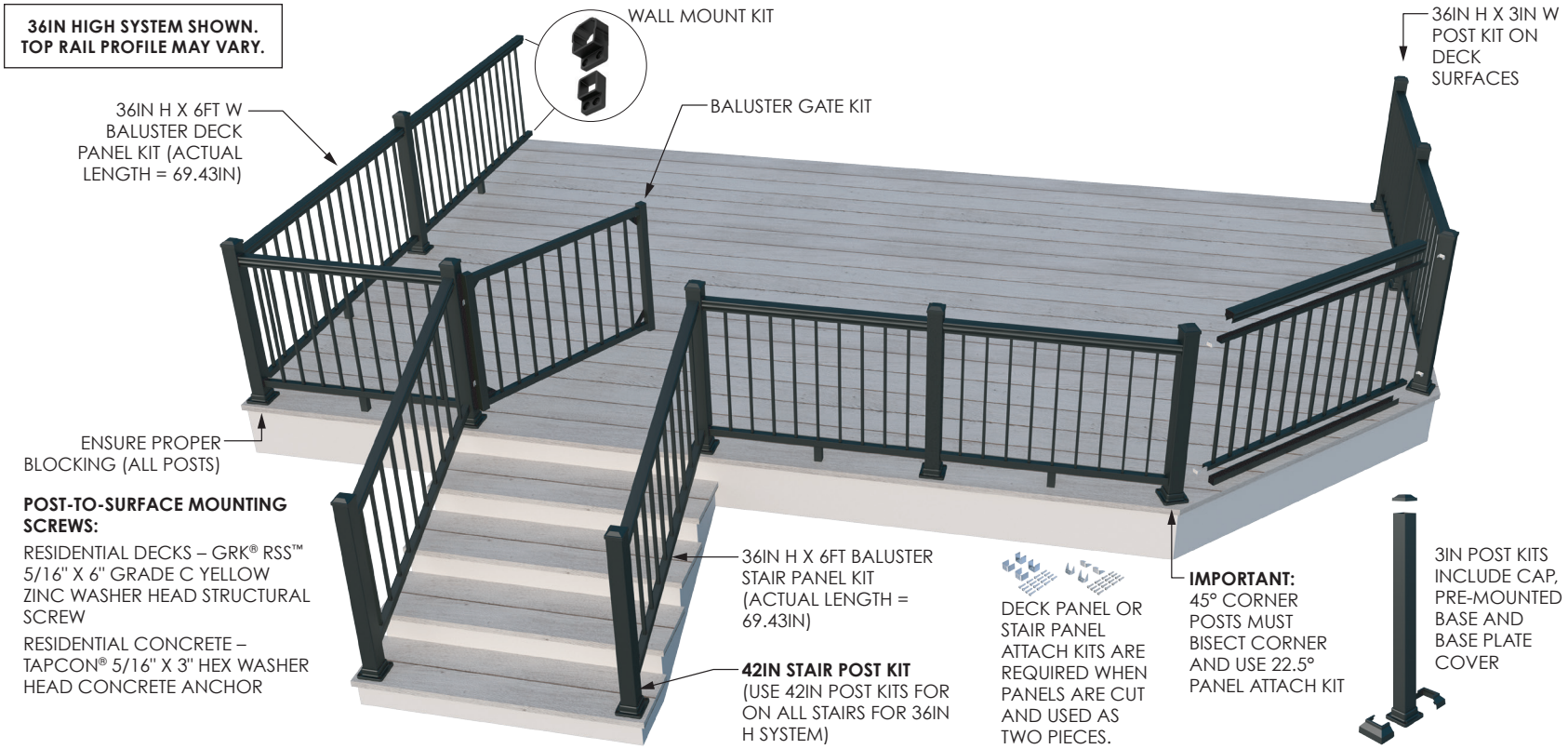

STEP ONE – Determine necessary posts required and prepare (end, center or corner)

Install Lower Deck Rail Clips – Two Options:

Option A - When No Lower Rail Clip Jig Is Available

- Measure 2 7/8" from top of casting shoulder and place a pencil mark for location of the top edge of the rail clip. *(Dia. #1)*
- Center clip on post and secure with (2) - #8x3/4" Self-tapping screws.

Dia. #1

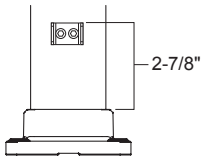

Dia. #2

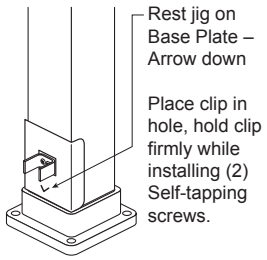

Option B - Using Lower Rail Clip Jig

- Place lower rail clip jig (w/ arrow facing base plate) on top of base plate upper edge. *(Dia. #2)*
- Place clip in hole and fasten with (2) - #8x3/4" Self-tapping screws.

STEP TWO - Secure Posts to Deck

Install proper post blocking as per *(Dia. #3a, 3b)*. Use proper attach screws or anchors as directed below. (Deck screws at each post location, are not provided with kits).

- With 3/16" drill bit, pre-drill through deck boards and into blocking.
- Level and plumb post using shims.
- Secure posts to deck with suggested screws.
- Set aside post caps and post base vinyl covers. Install them after the rest of the railing is complete. *(Dia. #4)*

Dia. #3a

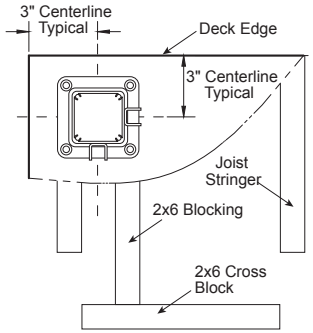

Dia. #3b

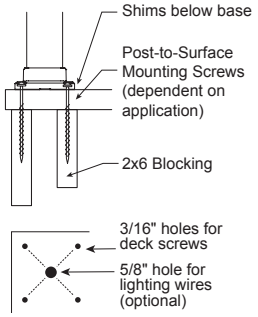

STEP THREE - Cut Deck Panels

- Clamp or hold panel against post, adjust for equal end spacing. *(Dia. #5)*
- Mark the top and bottom rails.
- Cut panel 1/16" less than opening size.
- Clean cut areas and apply touch-up paint on exposed ends.

Dia. #4

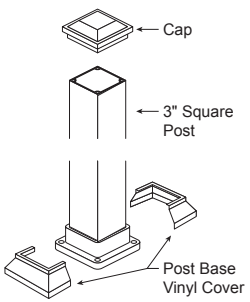

Dia. #5

