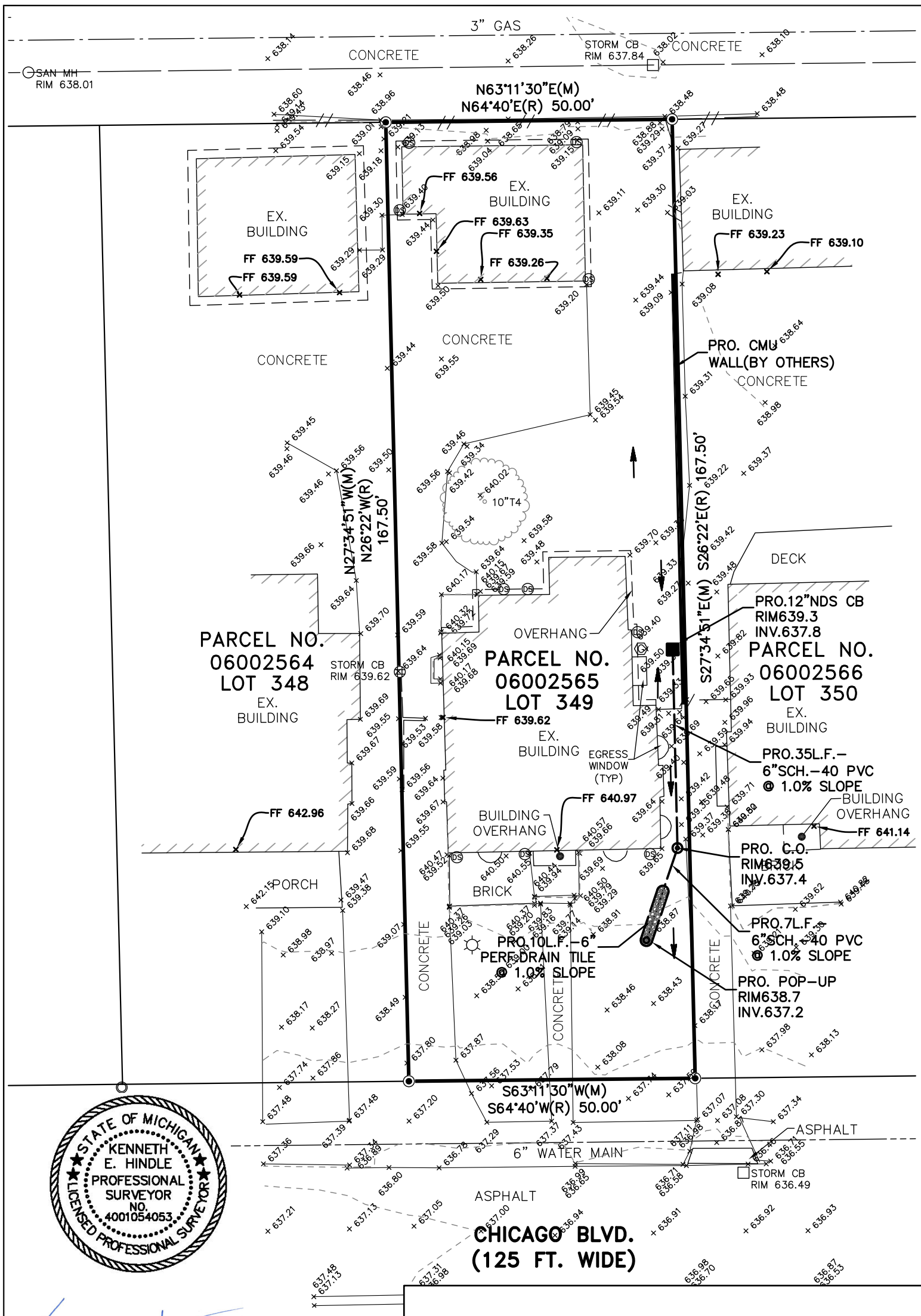

STATE OF MICHIGAN
KENNETH E. HINDLE
PROFESSIONAL SURVEYOR
NO. 4001054053
LICENSED PROFESSIONAL SURVEYOR

LEGEND

- EX. CATCH BASIN
- EX. MANHOLE
- EX. DOWNSPOUT/ROOF DRAIN
- EX. CLEANOUT
- EX. HYDRANT
- EX. LIGHTPOLE
- EX. UTILITY POLE
- EX. GUY ANCHOR
- EX. SIGN
- EX. POST/BOLLARD
- FOUND IRON
- SET IRON/SET PK NAIL
- EX. TREE
- EX. FENCE
- EX. SANITARY SEWER
- EX. STORM SEWER
- EX. WATER MAIN
- EX. GAS LINE
- EX. OVERHEAD LINE
- PRO. STORM
- PRO. CLEAN-OUT
- PRO. CATCH BASIN
- 639.2 x PRO. ELEVATION

DESCRIPTION:

N CHICAGO BLVD 349 BOSTON BLVD
SUB L29 P23 PLATS, W C 6/149
50 X 167.50

NOTE:

BEARINGS BASED ON MICHIGAN STATE PLANE COORDINATES, NAD83, MICHIGAN SOUTH ZONE

NOTICE:

CONSTRUCTION SITE SAFETY IS THE SOLE RESPONSIBILITY OF THE CONTRACTOR NEITHER THE OWNER NOR THE ENGINEER SHALL BE EXPECTED TO ASSUME ANY RESPONSIBILITY FOR SAFETY OF THE WORK, OF PERSONS ENGAGED IN THE WORK, OF ANY NEARBY STRUCTURES, OR OF ANY OTHER PERSONS.

NOTE:

THE LOCATIONS OF EXISTING UNDERGROUND UTILITIES ARE SHOWN IN AN APPROXIMATE WAY ONLY AS DISCLOSED BY AVAILABLE UTILITY COMPANY RECORDS AND HAVE NOT BEEN INDEPENDENTLY VERIFIED BY THE COMPANY. NO GUARANTEE IS EITHER EXPRESSED OR IMPLIED AS TO THE COMPLETENESS OR ACCURACY THEREOF. THE CONTRACTOR SHALL DETERMINE THE EXACT LOCATION OF ALL EXISTING UTILITIES BEFORE COMMENCING WORK, AND AGREES TO BE FULLY RESPONSIBLE FOR ANY AND ALL DAMAGES WHICH MIGHT BE OCCASIONED BY THE CONTRACTOR'S FAILURE TO EXACTLY LOCATE AND PRESERVE ANY AND ALL UNDERGROUND UTILITIES. THE CONTRACTOR SHALL NOTIFY THE DESIGN ENGINEER IMMEDIATELY IF A CONFLICT IS APPARENT.

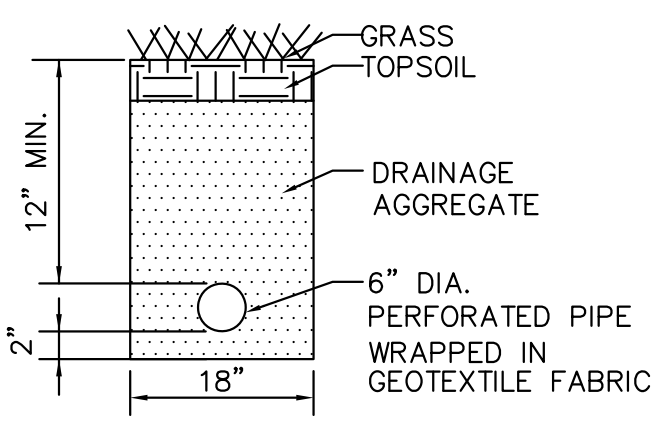

FRENCH DRAIN DETAIL

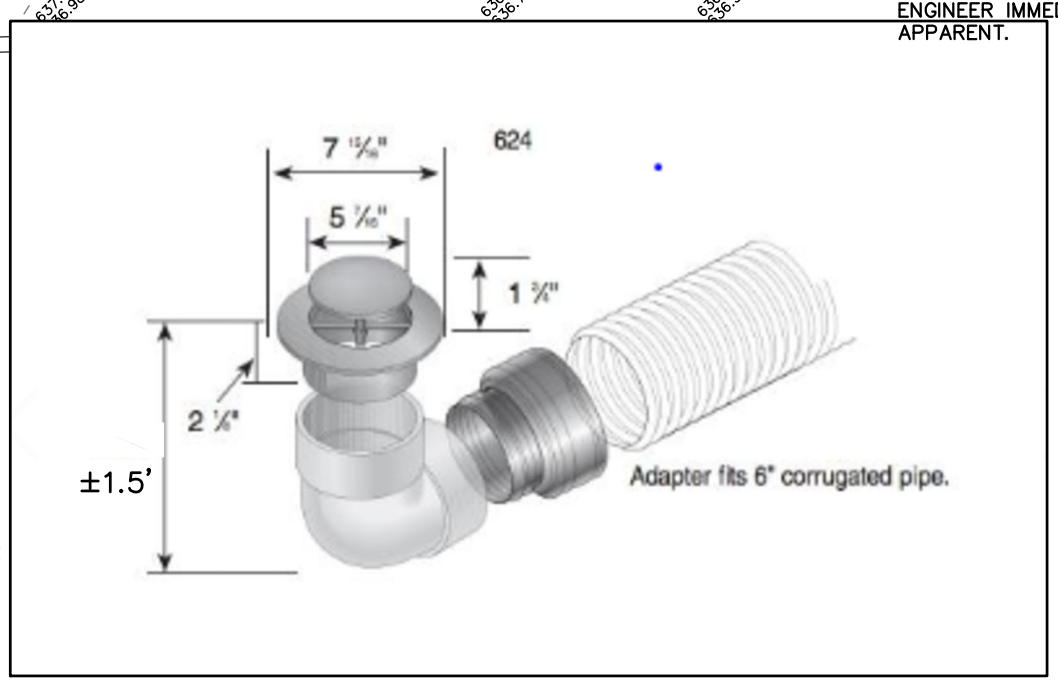

POP-UP DETAIL

NOT TO SCALE

REVISED
2-27-26 PER CLIENT
2-16-26 DOWNSPOUTS

RESIDENTIAL
SUBDIVISIONS
SITE CONDOMINIUM
MULTI-FAMILY
PLOT PLANS
CONSTRUCTION LAYOUT

SURVEYING
ALTA SURVEYS
BOUNDARY SURVEYS
TOPOGRAPHIC SURVEYS
PARCEL SPLITS

COMMERCIAL
SITE PLANNING
SITE ENGINEERING
INDUSTRIAL & MULTI-UNIT
LAND SURVEYING
CONSTRUCTION LAYOUT

ALPINE ENGINEERING, INC.
CIVIL ENGINEERS & LAND SURVEYORS

46892 WEST ROAD
SUITE 109
NOVI, MICHIGAN 48377

(248) 926-3701 (BUS)
(248) 926-3765 (FAX)
WWW.ALPINE-INC.NET

CLIENT:
DEBORAH MOHNEY

SITE PLAN

1466 CHICAGO BLVD.

SECTION: TOWNSHIP: CITY OF DETROIT WAYNE COUNTY MICHIGAN RANGE:

DATE: 2/2/2026
DRAWN BY: TTP
CHECKED BY: KEH
0 10 20
FBK: 453
CHF: RDF
SCALE HOR 1"=20 FT. VER 1"= FT.
1
26-107