Docusign Envelope ID: D964FA59-28E9-4B16-AB5D-9AA9B93217E1

HISTORIC DISTRICT COMMISSION
APPLICATION FOR WORK APPROVAL

City of Detroit - Planning & Development Department
2 Woodward Avenue, Suite 808
Detroit, Michigan 48226

APPLICATION ID
HDC2025-00544

PROPERTY INFORMATION

ADDRESS(ES): 97 Arden Park

HISTORIC DISTRICT: Arden Park-East Boston

SCOPE OF WORK: **(Check ALL that apply)**

- [x] Windows/ Doors
- [ ] Walls/ Siding
- [ ] Painting
- [ ] Roof/Gutters/ Chimney
- [x] Porch/Deck/Balcony
- [ ] Other
- [ ] Demolition
- [ ] Signage
- [ ] New Building
- [ ] Addition
- [ ] Site Improvements (landscape, trees, fences, patios, etc.)

BRIEF PROJECT DESCRIPTION:
Exterior rehabilitation to repair/replace front porch column, side sun porch, rear porch/basement entry and repair windows.

APPLICANT IDENTIFICATION

TYPE OF APPLICANT: Architect/Engineer/Consultant

NAME: Timothy Flintoff Jr.	**COMPANY NAME:** 4545 Architecture		
ADDRESS: 2761 E. Jefferson Ave, Ste 302	**CITY:** Detroit	**STATE:** MI	**ZIP:** 48207
PHONE: +1 (313) 450-4545	**EMAIL:** tim.flintoff@4545architecture.com		

I AGREE TO AND AFFIRM THE FOLLOWING:

- [x] I understand that the failure to upload all required documentation may result in extended review times for my project and/or a denied application.
- [x] I understand that the review of this application by the Historic District Commission does not waive my responsibility to comply with any other applicable ordinances including obtaining appropriate permits (building, sign, etc.) or other department approvals prior to beginning the work.
- [x] I hereby certify that the information on this application is true and correct. I certify that the proposed work is authorized by the owner of record and I have been authorized to make this application as the property owner(s) authorized agent.

Timothy Flintoff Jr.

DocuSigned by:
4B9B853003D74AD...

SIGNATURE

4545 Architecture

08/18/2025

DATE

2761 E. Jefferson Ave, Ste 302 Detroit MI 48207

+1 (313) 450-4545 tim.flintoff@4545architecture.com

NOTE: Based on the scope of work, additional documentation may be required. See www/detroitmi.gov/hdc for scope-specific requirements.

PROJECT DETAILS – TELL US ABOUT YOUR PROJECT

Instructions: Add project details using the text box in each section. If your details exceed the space provided, attach the details via the attachment icon for that section.

ePLANS PERMIT NUMBER: **(only applicable if you've already applied for permits through ePLANS)**	NA

GENERAL

1. DESCRIPTION OF EXISTING CONDITION

Please tell us about the current appearance and conditions of the areas you want to change. You may use a few sentences or attach a separate prepared document on the right. (For example, "existing roof on my garage is covered in gray asphalt shingles in poor condition.")

2. PHOTOGRAPHS

Help us understand your project. Please attach photographs of all areas where work is proposed.

3. DESCRIPTION OF PROJECT

In this box, tell us about what you want to do at the areas described above in box #1. (For example, Install new asphalt shingle roofing at garage.)

4. DETAILED SCOPE OF WORK

In this box, please describe all steps necessary to complete the work described in box #3. (For example, "remove existing shingles, replace wood deck as necessary, replace wood eaves, install roof vents, replace rotted fascia boards, paint, clean worksite.")

5. BROCHURES/CUT SHEETS

Please provide information on the products or materials you are proposing to install. For example, a brochure on the brand and color of the shingles proposed.

ADDITIONAL DETAILS

6. WINDOWS/DOORS *Detailed photographs of window(s) and/or door(s) proposed for replacement showing the condition of the interior and exterior of the window(s) and/or door(s)*	

Docusign Envelope ID: D964FA59-28E9-4B16-AB5D-9AA9B93217E1

4545 architecture

August 18, 2025

97 Arden Park Blvd.,
Detroit, MI 48202

RE: 97 Arden Park Blvd. Historic District Commission Submission

Project Narrative

97 Arden Park Blvd. is an existing single-family residence in the Arden Park-East Boston Historic District, located on the north side of Arden Park Blvd., between Woodward Ave. and John R. Street. Built in 1914, it has many features of Colonial Revival homes common in the neighborhood, including a symmetrical rectangular facade, a centered entry flanked by columns supporting a shallow portico, a side-gabled main roof, double-hung windows with divided lites and (previously existing) shutters at the front facade, and symmetrical front-facing dormers. It is brick-clad, with stone detailing at window sills and wing wall caps. The house retains most of its original windows, many of which are covered by aluminum storm windows. There is a brick bay at the east side of the house which is missing its original windows and currently boarded up with wood panels. In addition, most of what was once an enclosed porch at the west side of the building has been removed, with only the roof remaining, temporarily supported by a handful of wood posts and wood joists. Supporting columns at the rear entry porch have similarly been removed at some point. Also at the rear porch there are access doors to the first floor and basement, though there is currently no exterior floor to access the ground level, and no stair to access the basement. The wing wall at this rear porch is partially collapsed.

The intent of this project is to reconstruct the missing west enclosed porch and rear entry porch, replace missing columns from the front and rear porches, repair the existing windows, and make general repairs to the house. All existing windows will be repaired and repainted as required. They will be painted the same yellowish-white color as is existing. Existing storm windows will be removed and reinstalled as required for window access. Further, all new and repainted wood elements (i.e. columns, roof eave elements, etc.) will be painted yellowish-white to match existing elements, unless specified otherwise. All repair work is to be done using in-kind materials. All masonry elements are to be tuckpointed and repaired as necessary.

The west enclosed porch is to be constructed based on existing designation photos from 1981. The (2) existing pilasters attached to the house's facade will be repaired and repainted, and their missing wood bases will be replaced. The (2) remaining corners will have wood columns whose design is to align with the existing pilasters. The remaining walls of the enclosed porch will feature a 2'-0" tall base clad

2761 E. Jefferson, Suite 302, Detroit, MI 48207
e | tim.flintoff@4545architecture.com • c | 248.320.6098 • w | 4545architecture.com

Docusign Envelope ID: D964FA59-28E9-4B16-AB5D-9AA9B93217E1

with wood, whose trim mimics similar wood elements found at the front porch. The windows, which surround the porch on (3) sides, will be Anderson E-Series aluminum-clad wood windows with simulated divided lites. The existing roof will be repaired and repainted as required. The placement of the new columns and walls is to align with placement of the column caps present on the underside of the roof.

At the front porch, (4) missing wood columns will be replaced. Existing wood elements of the entry (primarily the pilasters, trim, fascia, soffit) will be repaired using in-kind materials and repainted as necessary. The concrete walkway from the porch to the sidewalk will also be repaired as required. At the 2nd floor of the front facade there is (1) remaining set of wood shutters, out of (4) sets which are present in designation photos; that set will be repaired and repainted, and (3) new sets of shutters which match the existing set in size, style, and color will be installed where they once were.

The brick bay at the east side of the house will have its missing windows replaced with Anderson E-Series aluminum-clad wood windows with simulated divided lites, whose color is to match the existing window color. The wood roof and eaves elements will be repaired with in-kind materials and repainted as required.

New wood decking will be installed at the rear porch, as well as a new wood stair to access the basement level. The existing brick wing wall will be repaired as required, and extended to act as a guard for the first floor porch and basement stair. Newly installed bricks and stone caps will match those existing. New wood columns will be installed to support the existing roof, similar to at the front and west porches; the roof and eave elements will be repaired using in-kind materials and repainted as required. A 36" black aluminum railing will be installed where there is not a brick wing wall present at the rear porch.

2761 E. Jefferson, Suite 302, Detroit, MI 48207
e | tim.flintoff@4545architecture.com • c | 248.320.6098 • w | 4545architecture.com

Docusign Envelope ID: D964FA59-28E9-4B16-AB5D-9AA9B93217E1

4545 architecture

August 18, 2025

97 Arden Park Blvd.,
Detroit, MI 48202

RE: 97 Arden Park Blvd. Historic District Commission Submission

Scope of Work

- Repair, strip, and repaint all existing windows as required
    - Paint to match existing
    - Remove and reinstall existing storm windows as required for access
- Repair existing front yard walkway as required
- Tuckpointe and repair all existing brick as required
- All new and repainted wood elements to be painted yellowish-white to match existing, unless specifically noted otherwise
- All repair work to be done using in-kind materials

Front Elevation

- Repair and repaint existing front entry door as required
- Repair and repaint existing wood elements (trim, fascia, soffit, pilasters, etc.) of front entry as required
- Replace (4) missing wood columns at front porch
    - "Melton Classics Tuscan 200TN" column type specified
- Repair and repaint (1) existing set of shutters at front elevation 2nd floor
- Replace (3) missing sets of wood shutters at front elevations 2nd floor
    - Shutter style, size, color, and material to match existing

East Bay Window

- Repair and repaint existing wood elements (trim, fascia, soffit, etc.) of east window bay as required
- Replace missing windows at east window bay with Anderson E-Series aluminum-clad wood windows with 3x3 simulated divided lites
    - Window color to match existing windows

2761 E. Jefferson, Suite 302, Detroit, MI 48207
e | tim.flintoff@4545architecture.com • c | 248.320.6098 • w | 4545architecture.com

Docusign Envelope ID: D964FA59-28E9-4B16-AB5D-9AA9B93217E1

4545 architecture

Rear Entry

- Construct new wood rear porch deck
- Install 36" black aluminum railing
- Construct new 3-wythe brick wing walls w/ stone caps at rear porch
    - New bricks/caps to match existing
- Construct new pressure treated wood stair at rear basement entrance
- Repair and repaint existing wood elements (trim, fascia, soffit, etc.) of rear entry as required
- Replace (2) missing wood columns at rear porch
    - "Melton Classics Tuscan 200TN" column type specified

Enclosed Side Porch

- Repair and repaint existing wood elements (trim, fascia, soffit, etc.) of west porch roof as required
- Repair and repaint existing wood pilasters as required
    - Reconstruct missing wood pilaster bases
- Construct new enclosed porch in place of previously existing
    - Existing porch base to remain
    - Corner columns to be same style, size, and color as existing
    - New windows to be Anderson E-Series aluminum-clad wood windows with simulated divided lites
        - Window color to match existing windows
    - Wood cladding at porch wall base to match existing exterior wood elements

2761 E. Jefferson, Suite 302, Detroit, MI 48207

e | tim.flintoff@4545architecture.com • c | 248.320.6098 • w | 4545architecture.com

Docusign Envelope ID: D964FA59-28E9-4B16-AB5D-9AA9B93217E1

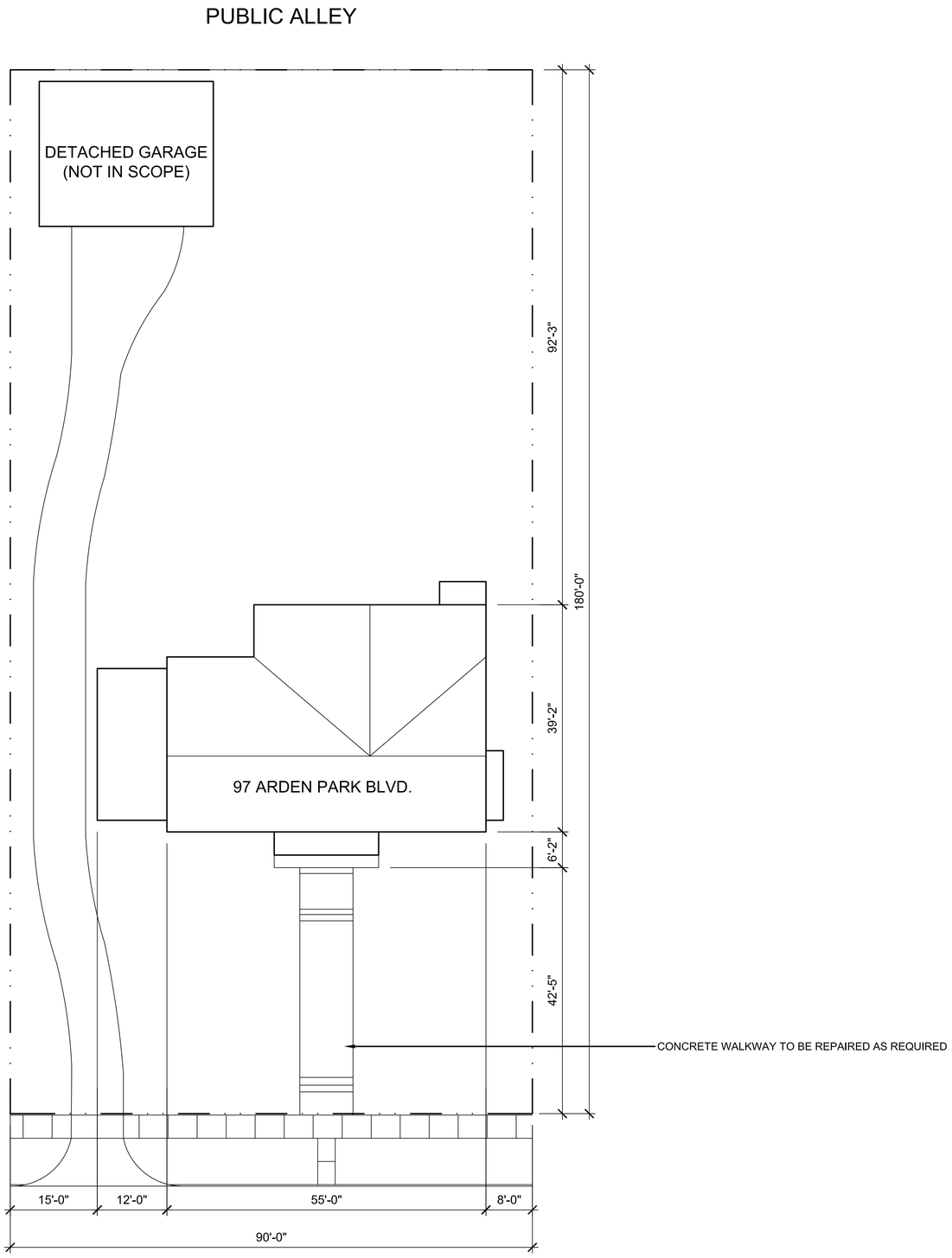

ARCHITECTURAL SITE PLAN
SCALE: 3/32" = 1'-0"

GENERAL SITE PLAN NOTES:

1. PAVEMENT SHALL BE OF THE TYPE, THICKNESS AND CROSS SECTION AS INDICATED ON THE PLANS AND AS FOLLOWS:
2. CONCRETE: PORTLAND CEMENT TYPE IA (AIR-ENTRAINED) WITH A MINIMUM CEMENT CONTENT OF SIX SACKS PER CUBIC YARD, MINIMUM 28 DAY COMPRESSIVE STRENGTH OF 3,500 PSI AND A SLUMP OF 1 1/2 TO 3 INCHES.
3. ASPHALT: BASE COURSE - MDOT BITUMINOUS MIXTURE NO. 1100L, 20AA; SURFACE COURSE - MDOT BITUMINOUS MIXTURE NO. 1100T, 20AA; ASPHALT CEMENT PENETRATION GRADE 85-100, BOND COAT - MDOT SS-1H EMULSION AT 0.10 GALLON PER SQUARE YARD; MAXIMUM 2 INCH LIFT.
4. PAVEMENT BASE SHALL BE COMPACTED TO 95% OF THE MAXIMUM DENSITY (MODIFIED PROCTOR) PRIOR TO PLACEMENT OF PROPOSED PAVEMENT. EXISTING SUB-BASE SHALL BE PROOF-ROLLED IN THE PRESENCE OF THE ENGINEER TO DETERMINE STABILITY.
5. ALL CONCRETE PAVEMENT, DRIVEWAYS, CURB & GUTTER, ETC., SHALL BE SPRAY CURED WITH WHITE MEMBRANE CURING COMPOUND IMMEDIATELY FOLLOWING FINISHING OPERATION.
6. ALL CONCRETE PAVEMENT JOINTS SHALL BE FILLED WITH HOT POURED RUBBERIZED ASPHALT JOINT SEALING COMPOUND IMMEDIATELY AFTER SAWCUT OPERATION. FEDERAL SPECIFICATION SS-S164.
7. ALL WORKMANSHIP AND MATERIALS SHALL BE IN ACCORDANCE WITH THE CURRENT STANDARDS AND SPECIFICATIONS OF THE MUNICIPALITY AND THE MICHIGAN DEPARTMENT OF TRANSPORTATION STANDARD SPECIFICATIONS FOR CONSTRUCTION, CURRENT EDITION.
8. ALL TOP OF CURB ELEVATIONS, AS SHOWN ON THE PLANS, ARE CALCULATED FOR A 6" CONCRETE CURB UNLESS OTHERWISE NOTED.
9. ALL SIDEWALK RAMPS, CONFORMING TO PUBLIC ACT NO. 8, 1993, SHALL BE INSTALLED AS INDICATED ON THE PLANS.
10. CONSTRUCTION OF A NEW OR RECONSTRUCTED DRIVE APPROACH CONNECTING TO AN EXISTING STATE OR COUNTY ROADWAY SHALL BE ALLOWED ONLY AFTER AN APPROVED PERMIT HAS BEEN SECURED FROM THE AGENCY HAVING JURISDICTION OVER SAID ROADWAY.
11. FOR ANY WORK WITHIN THE PUBLIC RIGHT-OF-WAY, THE CONTRACTOR SHALL PAY FOR AND SECURE ALL NECESSARY PERMITS AND LIKEWISE ARRANGE FOR ALL INSPECTION.
12. EXISTING TOPSOIL, VEGETATION AND ORGANIC MATERIALS SHALL BE STRIPPED AND REMOVED FROM PROPOSED PAVEMENT AREA PRIOR TO PLACEMENT OF BASE MATERIALS.
13. EXPANSION JOINTS SHOULD BE INSTALLED AT THE END OF ALL INTERSECTION RADII.
14. SIDEWALK RAMPS, CONFORMING TO PUBLIC ACT NO. 8, 1973, SHALL BE INSTALLED AS SHOWN AT ALL STREET INTERSECTIONS AND AT ALL BARRIER FREE PARKING AREAS AS INDICATED ON THE PLANS.
15. ALL PAVEMENT AREAS SHALL BE PROOF-ROLLED UNDER THE SUPERVISION OF A GEOTECHNICAL ENGINEER PRIOR TO THE PLACEMENT OF BASE MATERIALS AND PAVING MATERIALS.
16. FILL AREAS SHALL BE MACHINE COMPACTED IN UNIFORM LIFTS NOT EXCEEDING 9 INCHES THICK TO 98% OF THE MAXIMUM DENSITY (MODIFIED PROCTOR) PRIOR TO PLACEMENT OF PROPOSED PAVEMENT.
17. ALL LANDSCAPED AREAS TO BE PROVIDED W/ SPRINKLER SYSTEMS FOR 100% COVERAGE.

ARCHITECT:
4545 architecture
2761 E. JEFFERSON AVE
STE 302
DETROIT, MI 48207
P. 313.454.4545
TIM.FLINTOFF@4545ARCHITECTURE.COM

CONSULTANT:

Project :
97 ARDEN PARK
EXTERIOR RENOVATION

97 ARDEN PARK BLVD.,
DETROIT, MI 48202

Issued for :
HDC 08/18/2025

Drawn by : ANJ
Check by : THF

Sheet Title : ARCHITECTURAL SITE PLAN

Project No. : 2025034

Sheet No. : SP1.1

DO NOT SCALE DRAWINGS | ©2025 Timothy Flintoff Architect, PLLC

Docusign Envelope ID: D964FA59-28E9-4B16-AB5D-9AA9B93217E1

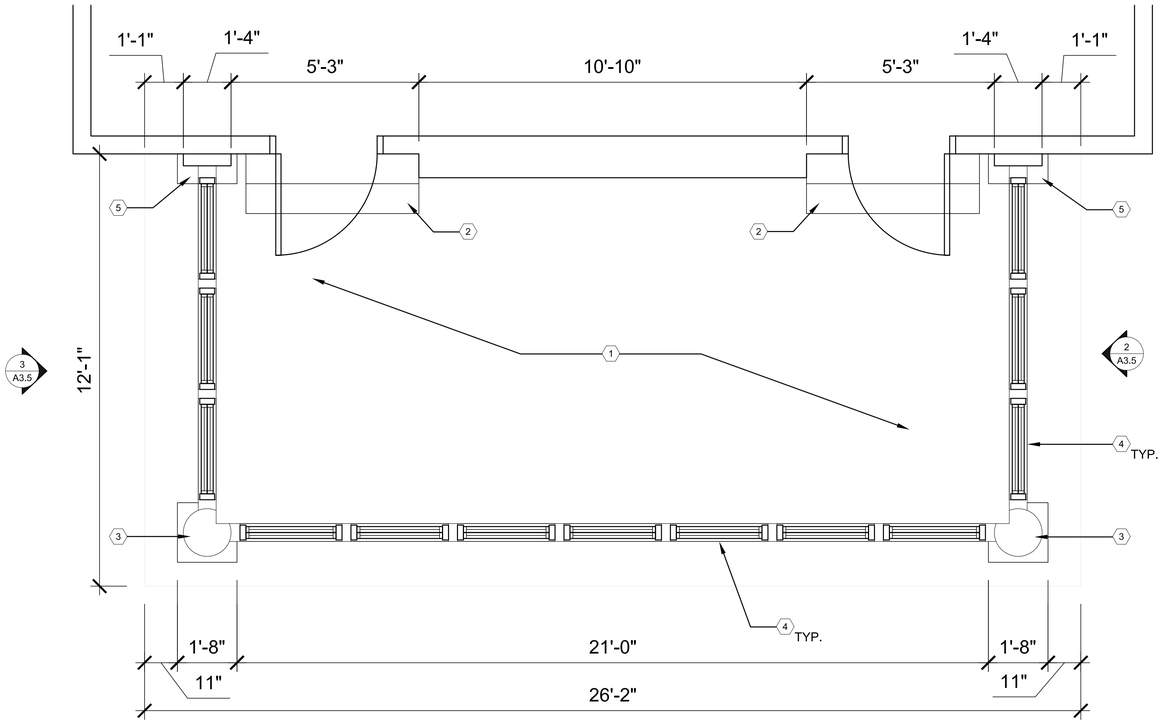

1 WEST COVERED PORCH PLAN
SCALE: 1/2"=1'-0"

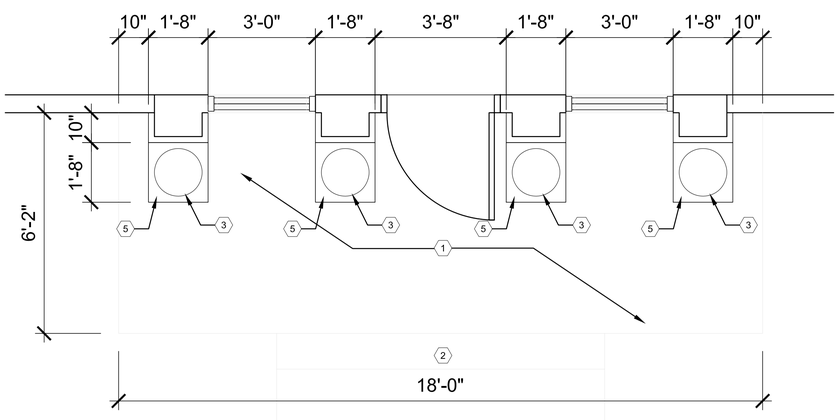

2 FRONT PORCH PLAN
SCALE: 1/2"=1'-0"

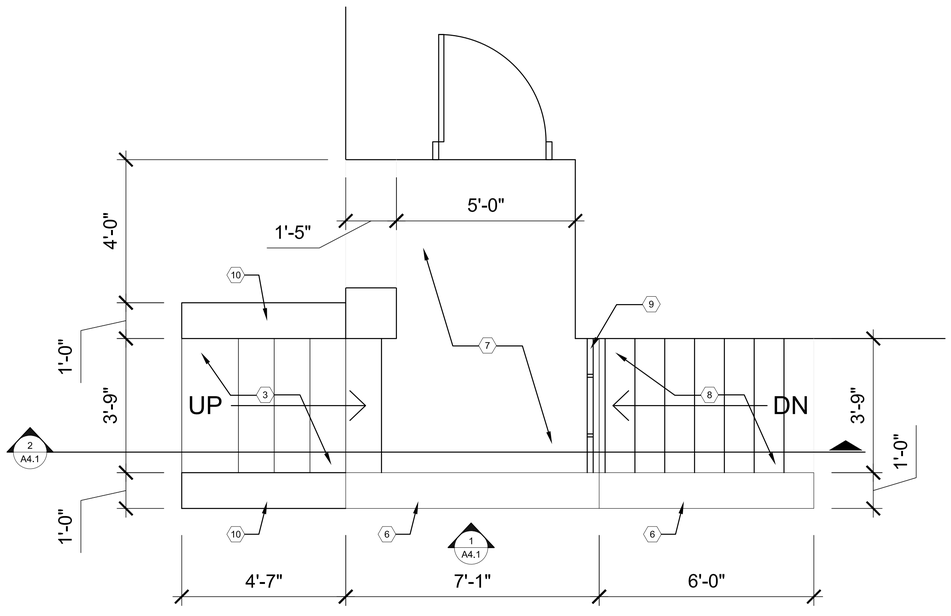

3 REAR PORCH PLAN
SCALE: 1/2"=1'-0"

GENERAL FLOOR PLAN NOTES:

1. THIS DRAWING IS DIAGRAMMATIC AND SHOULD BE USED TO DETERMINE THE DESIGN INTENT. THE CONTRACTOR IS RESPONSIBLE FOR THE COMPLETE SET OF WORK AS INDICATED AND SHALL FIELD VERIFY ALL WORK, COORDINATE ALL DRAWINGS / NEW WORK AND SHALL NOTIFY ARCHITECT IMMEDIATELY OF ANY DISCREPANCIES IN THE DOCUMENTS BEFORE PROCEEDING. FAILURE TO DO SO WILL RESULT IN THE CONTRACTOR TAKING FULL RESPONSIBILITY AND LIABILITY FOR SAID DISCREPANCIES.
2. ALL DIMENSIONS ARE SHOWN FROM FINISH FACE TO FINISH FACE OF PARTITION UNLESS OTHERWISE NOTED.
3. WALL THICKNESS' ARE NOMINAL NOT ACTUAL DIMENSIONS. SEE WALL SCHEDULE FOR ACTUAL DIMENSIONS.
4. ALL WORK SHALL BE DONE IN ACCORDANCE WITH ALL LOCAL, STATE, COUNTY CODE REGULATIONS, O.S.H.A., AND THE AMERICAN WITH DISABILITIES ACT (ADA). REFER TO THE CODE PLAN FOR MORE INFORMATION.
5. PROVIDE POSITIVE SLOPE TO ALL FLOOR DRAINS WHILE KEEPING FLOOR LEVEL AT WALL BASE CONDITION.

FLOOR PLAN KEY NOTES:

(TYPICAL THIS SHEET ONLY)

1. EXISTING CONCRETE PORCH SLAB TO REMAIN
2. EXISTING MASONRY STAIR TO REMAIN
3. WOOD COLUMN, BASIS OF DESIGN: MELTON CLASSICS TUSCAN 200TN, PAINTED YELLOWISH-WHITE TO MATCH EXISTING; CONTRACTOR TO VERIFY MISSING COLUMN LOCATION, ALIGN W/ ROOF
4. MISSING WINDOWS TO BE REPLACED W/ ANDERSON E-SERIES ALUM.-CLAD WOOD WINDOWS W/ 4x8 SIM. DIVIDED LITE PATTERN; ALIGN WALL PLACEMENT W/ EXISTING PILASTER AND ROOF; WINDOWS AND NEW WOOD TRIM TO BE PAINTED YELLOWISH-WHITE TO MATCH EXISTING
5. REBUILD MISSING WOOD PILASTER BASE, STYLE AND COLOR TO MATCH EXISTING
6. NEW 3-WYTHE BRICK WING WALL W/ STONE CAP, TO MATCH EXISTING; SEE A4.1
7. NEW WOOD DECK
8. NEW P.T. WOOD STAIR
9. 36" METAL RAILING, BLACK
10. EXISTING MASONRY WALL W/ STONE CAP TO REMAIN

ARCHITECT:
4545 architecture
2761 E. JEFFERSON AVE
STE 302
DETROIT, MI 48207
P. 313.454.4545
TIM.FLINTOFF@4545ARCHITECTURE.COM

CONSULTANT:

Project :
97 ARDEN PARK
EXTERIOR RENOVATION

97 ARDEN PARK BLVD.,
DETROIT, MI 48202

Issued for :
HDC 08/18/2025

Drawn by :
ANJ
Check by :
TRF

Sheet Title :
PARTIAL
FLOOR PLANS

Project No. :
2025034

Sheet No. :
A1.1

DO NOT SCALE DRAWINGS | ©2025 Timothy Flintoff Architect, PLLC

Docusign Envelope ID: D964FA59-28E9-4B16-AB5D-9AA9B93217E1

97 ARDEN PARK EXTERIOR RENOVATION

97 ARDEN PARK BLVD., DETROIT, MI 48202

ARCHITECT

4545 ARCHITECTURE | DESIGN, PLLC
TIMOTHY FLINTOFF, AIA, NCARB
2761. E JEFFERSON, SUITE 302
DETROIT, MI 48207
248-320-6098

PROJECT DATA

BUILDING CODE AUTHORITY:
CITY OF DETROIT, MICHIGAN

OWNER: ADD OWNER INFORMATION

APPLICABLE CODES:
BUILDING CODE
ALSO KNOWN AS THE "MICHIGAN BUILDING CODE"
2021 MICHIGAN BUILDING CODE (MBC) AS AMENDED

MECHANICAL CODE
ALSO KNOWN AS THE "MICHIGAN MECHANICAL CODE"
2021 MICHIGAN MECHANICAL CODE AS AMENDED

PLUMBING CODE
ALSO KNOWN AS THE "MICHIGAN PLUMBING CODE"
2021 MICHIGAN PLUMBING CODE AS AMENDED

ELECTRICAL CODE
ALSO KNOWN AS THE "MICHIGAN ELECTRICAL CODE"
2023 MICHIGAN ELECTRICAL CODE AS AMENDED

ENERGY CODE
2015 UNIFORM ENERGY CODE

BARRIER FREE REQUIREMENTS
AMERICANS WITH DISABILITIES ACT (ADA)
MBC-2015, CHAPTER 11
ICC / ANSI 117.1 - 2010, EXCEPT SECTION 611 & 707

PROJECT DESCRIPTION: EXTERIOR RENOVATION OF A SINGLE-FAMILY HOUSE IN A HISTORIC NEIGHBORHOOD

BUILDING DATA:
STORIES: 2+ BASEMENT

SPRINKLERED: NO

ENERGY EFFICIENCY
COMPLY WITH SECTION N102 OF THE 2015 MICHIGAN RESIDENTIAL CODE
CLIMATE ZONE: 5A

CEILING:	R-38
WOOD FRAMED WALL:	R-20 OR R-13(CAVITY)+R5(SHEATHING)
MASS WALL:	R-20/R-17
FLOOR:	R-30 OR FILL CAVITY, R-19 MIN.
SLAB:	R-10 (2'-0" DEEP)

BUILDING HEIGHT: 30'-0"

SHEET INDEX

SP1.1	ARCHITECTURAL SITE PLAN
A1.1	PARTIAL FLOOR PLANS
A3.1	EXTERIOR ELEVATIONS
A3.2	EXTERIOR ELEVATIONS
A3.3	EXTERIOR ELEVATIONS
A3.4	EXTERIOR ELEVATIONS
A3.5	ENCLOSED PORCH EXTERIOR ELEVATIONS
A4.1	REAR PORCH SECTION AND ELEVATION

PROJECT LOCATION
97 ARDEN PARK BLVD.

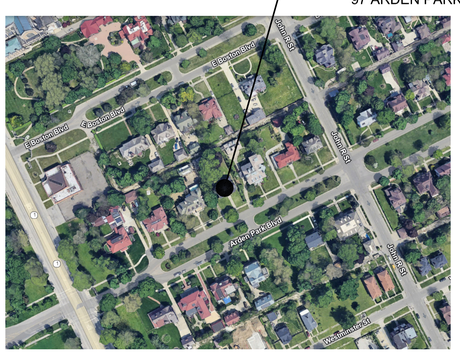

N
PROJECT SITE MAP: NOT TO SCALE

SYMBOL LEGEND

- 1 / A-5 / 2 — DARKENED ARROW INDICATES ELEVATED SECTION; ELEVATION NUMBER; SHEET NUMBER WHERE ELEVATION IS LOCATED
- A-5 — ELEVATION NUMBER; SHEET NUMBER WHERE ELEVATION IS LOCATED
- 12 / A-8 — DETAIL REFERENCE NUMBER; SHEET NUMBER WHERE DETAIL IS LOCATED
- 12 / A-8 DETAIL 1" = 1'-0" — DETAIL NUMBER; DETAIL NAME; DRAWING SCALE; SHEET NUMBER WHERE DETAIL IS REFERENCED
- EL. 8'-0" A.F.F. / B./CEILING — HEIGHT ABOVE FINISHED FLOOR; REFERENCE POINT OF ELEVATION
- 8'-0" — HEIGHT ABOVE FINISHED FLOOR
- NOTE: DATUM SYMBOL INDICATES A SPECIFIC REFERENCE HEIGHT OF MATERIAL INDICATED
- ROOM NAME / 0000000 — ROOM NAME; ROOM NUMBER
- 1 / A / B — NUMBERS DESIGNATE VERTICAL COLUMN LINES; LETTERS DESIGNATE HORIZONTAL COLUMN LINES; CIRCLES REPRESENT NEW COLUMN LINES; DASHED CIRCLES REPRESENT EXISTING COLUMNS
- EXISTING DOOR SYMBOL
- NEW DOOR SYMBOL
- XXX — DOOR DESIGNATION
- 1 — WALL TYPE DESIGNATION NUMBER - COORDINATE WITH SCHEDULE
- 17 — EQUIPMENT DESIGNATION NUMBER - COORDINATE WITH PLAN NOTES
- 12 — KEY NOTE DESIGNATION NUMBER - COORDINATE WITH PLAN NOTES
- 1 — ADDENDUM DESIGNATION NUMBER
- 1 — BULLETIN DESIGNATION NUMBER
- MATCH LINE / REF: A3 — SHEET REFERENCE FOR DRAWING CONTINUATION

MATERIAL LEGEND

- ACOUSTICAL CEILING
- BATT/LOOSE INSULATION
- BLOCKING/ROUGH LUMBER
- CONCRETE
- FINISHED WOOD
- GLASS
- GYPSUM WALLBOARD
- MASONRY
- PARTICLE BOARD
- PLYWOOD

ABBREVIATION

@	AT
ACOUST.	ACOUSTICAL
A.C.T.	ACOUSTIC CEILING TILE
ADJ.	ADJACENT
A.F.F.	ABOVE FINISH FLOOR
ALUM.	ALUMINUM
ANOD.	ANODIZED
BD.	BOARD
BLDG.	BUILDING
BLK.	BLOCK
BLKG.	BLOCKING
CEM.	CEMENT
C.J.	CONTROL JOINT
CLG.	CEILING
℄	CENTER LINE
C.O.	CLEAN OUT
COL.	COLUMN
CONC.	CONCRETE
C.G.	CORNER GUARD
CONST.	CONSTRUCTION
CONT.	CONTINUOUS
CORR.	CORRUGATED
CPT.	CARPET
C.T.	CERAMIC TILE
DET.	DETAIL
DIA.	DIAMETER
DM.	DIMENSION
DN.	DOWN
D.O.	DOOR OPENING
DR.	DOOR
DWG.	DRAWING
EA.	EACH
ELEV.	ELEVATION
E.W.	EACH WAY
EXG.	EXISTING
EXIST.	EXISTING
EXP.	EXPANSION, EXPOSED
EXT.	EXTERIOR
F.D.	FLOOR DRAIN
FDN.	FOUNDATION
F.R.P.	FIBER REINFORCED PANELS
FIN.	FINISH
FLR.	FLOOR
F.O.	FACE OF
F.O.S.	FACE OF STUD
FR.	FRAME
FTG.	FOOTING
FV.	FIELD VERIFY
GA.	GAUGE
GALV.	GALVANIZED
GYP.	GYPSUM
HDW.	HARDWARE
H.M.	HOLLOW METAL
HORIZ.	HORIZONTAL
HT.	HEIGHT
I.D.	INSIDE DIAMETER
INSUL.	INSULATION
INT.	INTERIOR
JT.	JOINT
LAV.	LAVATORY
LG.	LONG
L.L.O.	LONG LEG OUTSTANDING
L.L.V.	LONG LEG VERTICAL
MAX.	MAXIMUM
MECH.	MECHANICAL
MET.	METAL
MEZZ.	MEZZANINE
M.I.	MISCELLANEOUS IRON
MIN.	MINIMUM
MISC.	MISCELLANEOUS
M.O.	MASONRY OPENING
N.I.C.	NOT IN CONTRACT
N.T.S.	NOT TO SCALE
O.C.	ON CENTER
O.D.	OUTSIDE DIAMETER
OPNG.	OPENING
OPP.	OPPOSITE
PL.G.	PLATE GLASS
PL.S.	PLATE STEEL
P.LAM	PLASTIC LAMINATE
PLAS.	PLASTER
PREFAB.	PREFABRICATED
PROJ.	PROJECT, PROJECTION
P.S.F.	POUNDS PER SQUARE FOOT
PT.	PAINT, POINT
R.	RISER
R.A.	RETURN AIR
R.B.	RUBBER BASE
R.C.	ROOF CONDUCTOR
R.C.P.	REFLECTED CEILING PLAN
R.D.	ROOF DRAIN
R.F.	RUBBER FLOORING
REINF.	REINFORCED, REINFORCING
REQ'D.	REQUIRED
RFG.	ROOFING
RM.	ROOM
R.S.	ROOF SUMP
R.T.	RUBBER TILE
SAN.	SANITARY
SCHED.	SCHEDULE
SHT.	SHEET
SIM.	SIMILAR
SPEC.	SPECIFICATION
S.S.	SERVICE SINK
STL.	STEEL
STD.	STANDARD
STOR.	STORAGE
STRUCT.	STRUCTURAL
SUSP.	SUSPENDED
SW.	SWITCH
SYM.	SYMMETRICAL
T.	TREAD
T&B	TOP AND BOTTOM
TEL.	TELEPHONE
TERR.	TERRAZZO
T&G	TONGUE AND GROOVE
THK.	THICK, THICKNESS
THRES.	THRESHOLD
T.O.S.	TOP OF STEEL
TYP.	TYPICAL
U/C	UNDERCUT
U.N.O.	UNLESS NOTED OTHERWISE
V.B.	VINYL BASE
V.C.T.	VINYL COMPOSITION TILE
V.I.F.	VERIFY IN FIELD
W.	WIDE
VERT.	VERTICAL
WAINS.	WAINSCOT
W.C.	WATER CLOSET
WD.WIN.	WOOD WINDOW
WT.	WEIGHT
W.W.F.	WELDED WIRE FABRIC

ARCHITECT:
4545 architecture
2761 E. JEFFERSON AVE
STE 302
DETROIT, MI 48207
P. 313.454.4545
TIM.FLINTOFF@4545ARCHITECTURE.COM

CONSULTANT:

Project :
97 ARDEN PARK
EXTERIOR RENOVATION

97 ARDEN PARK BLVD.,
DETROIT, MI 48202

Issued for :
HDC 08/18/2025

Drawn by :
ANJ

Check by :
THF

Sheet Title :
TITLE SHEET,
SHEET INDEX, AND
LOCATOR PLAN

Project No. :
2025034

Sheet No. :
TS1.1

DO NOT SCALE DRAWINGS | ©2025 Timothy Flintoff Architect, PLLC

Docusign Envelope ID: D964FA59-28E9-4B16-AB5D-9AA9B93217E1

ELEVATION KEY NOTES:

(TYPICAL THIS SHEET ONLY)

1. EXISTING WINDOWS AND ENTRY DOOR TO BE REPAIRED AND REPAINTED AS REQ'D; PAINT YELLOWISH-WHITE TO MATCH EXISTING
2. WOOD TRIM, SOFFIT, AND FASCIA ELEMENTS OF ENTRY TO BE REPAIRED AND/OR PAINTED AS REQ'D USING IN-KIND MATERIALS AND MAINTAINING THE EXISTING COLOR(S)
3. MISSING COLUMNS TO BE REPLACED WITH WOOD COLUMNS: MELTON CLASSICS TUSCAN 200TN, PAINTED TO MATCH EXISTING
4. TUCKPOINTE AND REPAIR MASONRY AS REQ'D (TYP.)
5. STORM WINDOWS TO REMAIN (REMOVE AND REINSTALL AS REQ'D TO ACCESS WINDOWS) (TYP. U.N.O.)
6. EXISTING SHUTTERS TO BE REPAIRED, REPAINTED TO MATCH EXISTING, AND REPLACED AS REQ'D
7. INSTALL NEW WOOD SHUTTERS; SIZE, STYLE, AND COLOR TO MATCH EXISTING

GENERAL SECTION/ELEVATION NOTES:

1. THIS DRAWING IS DIAGRAMMATIC AND SHOULD BE USED TO DETERMINE THE DESIGN INTENT. THE CONTRACTOR IS RESPONSIBLE FOR THE COMPLETE SET OF WORK AS INDICATED AND SHALL FIELD VERIFY ALL WORK, COORDINATE ALL DRAWINGS / NEW WORK AND SHALL NOTIFY ARCHITECT IMMEDIATELY OF ANY DISCREPANCIES IN THE DOCUMENTS BEFORE PROCEEDING. FAILURE TO DO SO WILL RESULT IN THE CONTRACTOR TAKING FULL RESPONSIBILITY AND LIABILITY FOR SAID DISCREPANCIES.
2. ALL DIMENSIONS ARE SHOWN FROM FINISH FACE TO FINISH FACE OF PARTITION UNLESS OTHERWISE NOTED.
3. ALL WORK SHALL BE DONE IN ACCORDANCE WITH ALL LOCAL, STATE, COUNTY CODE REGULATIONS, O.S.H.A., AND THE AMERICAN WITH DISABILITIES ACT (ADA). REFER TO THE CODE PLAN FOR MORE INFORMATION.
4. REFER TO SIDING MANUFACTURER INSTALLATION INSTRUCTIONS AND STANDARD DETAILS
5. CONTRACTOR TO VERIFY/COORDINATE CODE REQUIRED WINDOW EGRESS REQUIREMENTS

1 SOUTH ELEVATION

2 FRONT PORCH DETAIL

3 FRONT PORCH DETAILS

ARCHITECT:
4545 architecture
2761 E. JEFFERSON AVE
STE 302
DETROIT, MI 48207
P. 313.454.4545
TIM.FLINTOFF@4545ARCHITECTURE.COM

CONSULTANT:

Project :
97 ARDEN PARK
EXTERIOR RENOVATION

97 ARDEN PARK BLVD.,
DETROIT, MI 48202

Issued for :
HDC 08/18/2025

Drawn by :
ANJ

Check by :
TRF

Sheet Title :
EXTERIOR
ELEVATION

Project No. :
2025034

Sheet No. :
A3.1

DO NOT SCALE DRAWINGS | ©2025 Timothy Flintoff Architect, PLLC

Docusign Envelope ID: D964FA59-28E9-4B16-AB5D-9AA9B93217E1

ELEVATION KEY NOTES:

(TYPICAL THIS SHEET ONLY)

1. EXISTING WINDOWS TO BE REPAIRED AND REPAINTED AS REQ'D; PAINT YELLOWISH-WHITE TO MATCH EXISTING
2. WOOD SOFFIT, AND FASCIA ELEMENTS OF BAY TO BE REPAIRED AND/OR PAINTED AS REQ'D USING IN-KIND MATERIALS; PAINT YELLOWISH-WHITE TO MATCH EXISTING
3. MISSING WINDOWS TO BE REPLACED W/ ANDERSON E-SERIES ALUM.-CLAD WOOD WINDOWS W/ 3x3 SIM. DIVIDED LITE PATTERN; WINDOWS AND NEW WOOD TRIM TO BE PAINTED YELLOWISH-WHITE TO MATCH EXISTING
4. TUCKPOINTE AND REPAIR MASONRY AS REQ'D (TYP.)
5. STORM WINDOWS TO REMAIN (REMOVE AND REINSTALL AS REQ'D TO ACCESS WINDOWS) (TYP. U.N.O.)

GENERAL SECTION/ELEVATION NOTES:

1. THIS DRAWING IS DIAGRAMMATIC AND SHOULD BE USED TO DETERMINE THE DESIGN INTENT. THE CONTRACTOR IS RESPONSIBLE FOR THE COMPLETE SET OF WORK AS INDICATED AND SHALL FIELD VERIFY ALL WORK, COORDINATE ALL DRAWINGS / NEW WORK AND SHALL NOTIFY ARCHITECT IMMEDIATELY OF ANY DISCREPANCIES IN THE DOCUMENTS BEFORE PROCEEDING. FAILURE TO DO SO WILL RESULT IN THE CONTRACTOR TAKING FULL RESPONSIBILITY AND LIABILITY FOR SAID DISCREPANCIES.
2. ALL DIMENSIONS ARE SHOWN FROM FINISH FACE TO FINISH FACE OF PARTITION UNLESS OTHERWISE NOTED.
3. ALL WORK SHALL BE DONE IN ACCORDANCE WITH ALL LOCAL, STATE, COUNTY CODE REGULATIONS, O.S.H.A., AND THE AMERICAN WITH DISABILITIES ACT (ADA). REFER TO THE CODE PLAN FOR MORE INFORMATION.
4. REFER TO SIDING MANUFACTURER INSTALLATION INSTRUCTIONS AND STANDARD DETAILS
5. CONTRACTOR TO VERIFY/COORDINATE CODE REQUIRED WINDOW EGRESS REQUIREMENTS

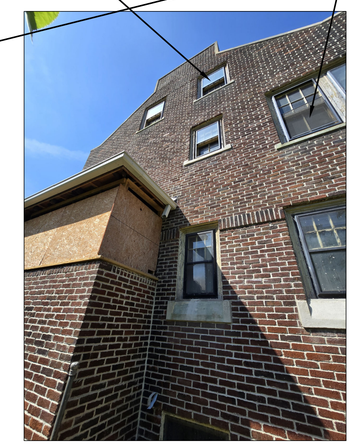

1 EAST ELEVATION

ARCHITECT:
4545 architecture
2761 E. JEFFERSON AVE
STE 302
DETROIT, MI 48207
P. 313.454.4545
TIM.FLINTOFF@4545ARCHITECTURE.COM

CONSULTANT:

Project :
97 ARDEN PARK
EXTERIOR RENOVATION

97 ARDEN PARK BLVD.,
DETROIT, MI 48202

Issued for :
HDC 08/18/2025

Drawn by :
ANJ

Check by :
TRF

Sheet Title :
EXTERIOR
ELEVATION

Project No. :
2025034

Sheet No. :
A3.2

DO NOT SCALE DRAWINGS | ©2025 Timothy Flintoff Architect, PLLC

Docusign Envelope ID: D964FA59-28E9-4B16-AB5D-9AA9B93217E1

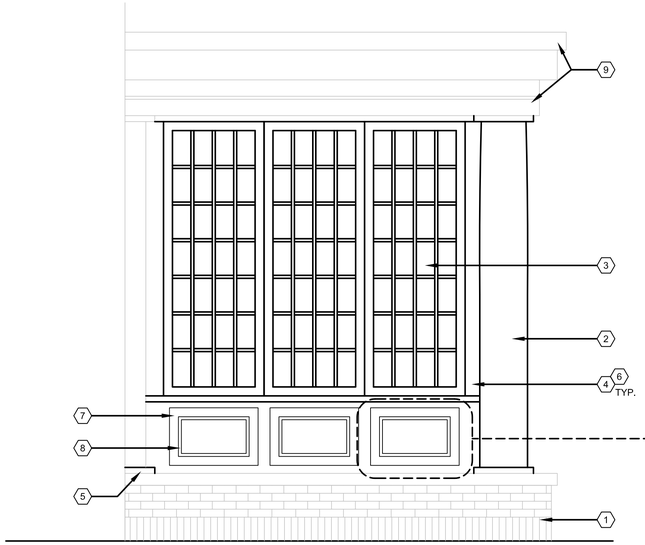

EXISTING FRONT PORCH SOFFIT TRIM

3 ENCLOSED PORCH NORTH ELEVATION
SCALE: 1/2"=1'-0"

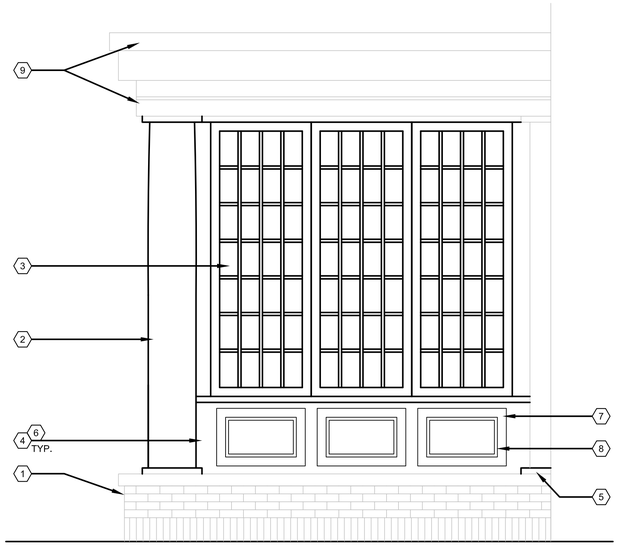

2 ENCLOSED PORCH SOUTH ELEVATION
SCALE: 1/2"=1'-0"

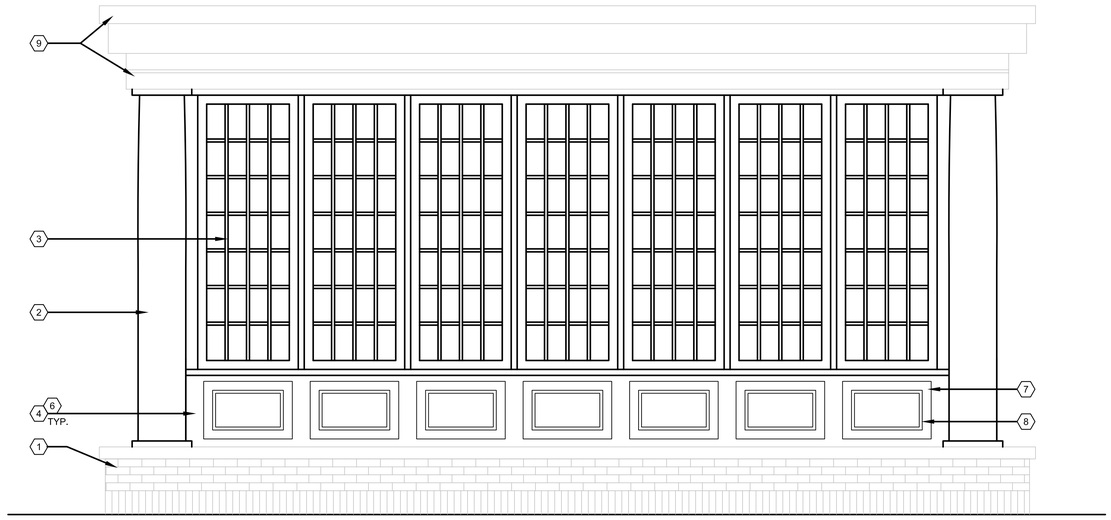

1 ENCLOSED PORCH WEST ELEVATION
SCALE: 1/2"=1'-0"

ELEVATION KEY NOTES:

(TYPICAL THIS SHEET ONLY)

1. EXISTING BRICK PORCH AND CONC. SLAB TO REMAIN
2. WOOD COLUMN, BASIS OF DESIGN: MELTON CLASSICS TUSCAN 200TN, PAINTED YELLOWISH-WHITE TO MATCH EXISTING; CONTRACTOR TO VERIFY MISSING COLUMN LOCATION AND ALIGN W/ EXISTING ROOF
3. ANDERSON E-SERIES ALUM.-CLAD WOOD WINDOWS W/ SIM. DIVIDED LITE PATTERN AS SHOWN; PAINT YELLOWISH-WHITE TO MATCH EXISTING
4. CONTRACTOR TO ENSURE WALL PLACEMENT IS ALIGNED W/ EXISTING PILASTER AND ROOF;
5. REBUILD MISSING WOOD PILASTER BASE; STYLE AND COLOR TO MATCH EXISTING
6. WOOD CLADDING AND TRIM; PAINT YELLOWISH-WHITE TO MATCH EXISTING
7. 2x4 WOOD TRIM, PAINTED
8. QUARTER ROUND WOOD TRIM, PAINTED
9. EXISTING ROOF STRUCTURE AND TRIM TO REMAIN; REPAIR AS REQ'D USING IN-KIND MATERIALS; PAINT TO MATCH EXISTING

GENERAL SECTION/ELEVATION NOTES:

1. THIS DRAWING IS DIAGRAMMATIC AND SHOULD BE USED TO DETERMINE THE DESIGN INTENT. THE CONTRACTOR IS RESPONSIBLE FOR THE COMPLETE SET OF WORK AS INDICATED AND SHALL FIELD VERIFY ALL WORK, COORDINATE ALL DRAWINGS / NEW WORK AND SHALL NOTIFY ARCHITECT IMMEDIATELY OF ANY DISCREPANCIES IN THE DOCUMENTS BEFORE PROCEEDING. FAILURE TO DO SO WILL RESULT IN THE CONTRACTOR TAKING FULL RESPONSIBILITY AND LIABILITY FOR SAID DISCREPANCIES.
2. ALL DIMENSIONS ARE SHOWN FROM FINISH FACE TO FINISH FACE OF PARTITION UNLESS OTHERWISE NOTED.
3. ALL WORK SHALL BE DONE IN ACCORDANCE WITH ALL LOCAL, STATE, COUNTY CODE REGULATIONS, O.S.H.A., AND THE AMERICAN WITH DISABILITIES ACT (ADA). REFER TO THE CODE PLAN FOR MORE INFORMATION.
4. REFER TO SIDING MANUFACTURER INSTALLATION INSTRUCTIONS AND STANDARD DETAILS
5. CONTRACTOR TO VERIFY/COORDINATE CODE REQUIRED WINDOW EGRESS REQUIREMENTS

ARCHITECT:
4545 architecture
2761 E. JEFFERSON AVE
STE 302
DETROIT, MI 48207
P. 313.454.4545
TIM.FLINTOFF@4545ARCHITECTURE.COM

CONSULTANT:

Project :
97 ARDEN PARK
EXTERIOR RENOVATION

97 ARDEN PARK BLVD.,
DETROIT, MI 48202

Issued for :
HDC 08/18/2025

Drawn by :
ANJ
Check by :
THF

Sheet Title :
ENCLOSED PORCH
EXTERIOR ELEVATIONS

Project No. :
2025034

Sheet No. :
A3.5

DO NOT SCALE DRAWINGS | ©2025 Timothy Flintoff Architect, PLLC

Docusign Envelope ID: D964FA59-28E9-4B16-AB5D-9AA9B93217E1

3 WEST PORCH DETAILS

1 WEST ELEVATION

2 SOUTHWEST PORCH VIEW

ELEVATION KEY NOTES:

(TYPICAL THIS SHEET ONLY)

1. EXISTING WINDOWS TO BE REPAIRED AND REPAINTED AS REQ'D; PAINT YELLOWISH-WHITE TO MATCH EXISTING
2. WOOD TRIM, SOFFIT, AND FASCIA ELEMENTS OF PORCH TO BE REPAIRED AND/OR PAINTED AS REQ'D USING IN-KIND MATERIALS; PAINT YELLOWISH-WHITE TO MATCH EXISTING
3. MISSING COLUMNS TO BE REPLACED WITH WOOD COLUMNS: MELTON CLASSICS TUSCAN 200TN, PAINTED TO MATCH EXISTING
4. TUCKPOINTE AND REPAIR MASONRY AS REQ'D (TYP.)
5. REBUILD MISSING ENCLOSED PORCH, SEE A3.5

GENERAL SECTION/ELEVATION NOTES:

1. THIS DRAWING IS DIAGRAMMATIC AND SHOULD BE USED TO DETERMINE THE DESIGN INTENT. THE CONTRACTOR IS RESPONSIBLE FOR THE COMPLETE SET OF WORK AS INDICATED AND SHALL FIELD VERIFY ALL WORK, COORDINATE ALL DRAWINGS / NEW WORK AND SHALL NOTIFY ARCHITECT IMMEDIATELY OF ANY DISCREPANCIES IN THE DOCUMENTS BEFORE PROCEEDING. FAILURE TO DO SO WILL RESULT IN THE CONTRACTOR TAKING FULL RESPONSIBILITY AND LIABILITY FOR SAID DISCREPANCIES.
2. ALL DIMENSIONS ARE SHOWN FROM FINISH FACE TO FINISH FACE OF PARTITION UNLESS OTHERWISE NOTED.
3. ALL WORK SHALL BE DONE IN ACCORDANCE WITH ALL LOCAL, STATE, COUNTY CODE REGULATIONS, O.S.H.A., AND THE AMERICAN WITH DISABILITIES ACT (ADA). REFER TO THE CODE PLAN FOR MORE INFORMATION.
4. REFER TO SIDING MANUFACTURER INSTALLATION INSTRUCTIONS AND STANDARD DETAILS
5. CONTRACTOR TO VERIFY/COORDINATE CODE REQUIRED WINDOW EGRESS REQUIREMENTS

ARCHITECT:
4545 architecture
2761 E. JEFFERSON AVE
STE 302
DETROIT, MI 48207
P. 313.454.4545
TIM.FLINTOFF@4545ARCHITECTURE.COM

CONSULTANT:

Project :
97 ARDEN PARK
EXTERIOR RENOVATION

97 ARDEN PARK BLVD.,
DETROIT, MI 48202

Issued for :
HDC 08/18/2025

Drawn by :
ANJ
Check by :
THF

Sheet Title :
EXTERIOR
ELEVATION

Project No. :
2025034

Sheet No. :
A3.4

DO NOT SCALE DRAWINGS | ©2025 Timothy Flintoff Architect, PLLC

Docusign Envelope ID: D964FA59-28E9-4B16-AB5D-9AA9B93217E1

ELEVATION KEY NOTES:

(TYPICAL THIS SHEET ONLY)

1. EXISTING WINDOWS TO BE REPAIRED AND REPAINTED AS REQ'D; PAINT YELLOWISH-WHITE TO MATCH EXISTING
2. WOOD TRIM, SOFFIT, AND FASCIA ELEMENTS OF ENTRY TO BE REPAIRED AND/OR PAINTED AS REQ'D USING IN-KIND MATERIALS; PAINT YELLOWISH-WHITE TO MATCH EXISTING
3. MISSING COLUMNS TO BE REPLACED WITH WOOD COLUMNS: MELTON CLASSICS TUSCAN 200TN, PAINTED TO MATCH EXISTING
4. TUCKPOINTE AND REPAIR MASONRY AS REQ'D (TYP.)
5. NEW WOOD PORCH, SEE A1.1
6. REBUILD MISSING ENCLOSED PORCH, SEE A3.5
7. STORM WINDOWS TO REMAIN (REMOVE AND REINSTALL AS REQ'D TO ACCESS WINDOWS) (TYP. U.N.O.)

GENERAL SECTION/ELEVATION NOTES:

1. THIS DRAWING IS DIAGRAMMATIC AND SHOULD BE USED TO DETERMINE THE DESIGN INTENT. THE CONTRACTOR IS RESPONSIBLE FOR THE COMPLETE SET OF WORK AS INDICATED AND SHALL FIELD VERIFY ALL WORK, COORDINATE ALL DRAWINGS / NEW WORK AND SHALL NOTIFY ARCHITECT IMMEDIATELY OF ANY DISCREPANCIES IN THE DOCUMENTS BEFORE PROCEEDING. FAILURE TO DO SO WILL RESULT IN THE CONTRACTOR TAKING FULL RESPONSIBILITY AND LIABILITY FOR SAID DISCREPANCIES.
2. ALL DIMENSIONS ARE SHOWN FROM FINISH FACE TO FINISH FACE OF PARTITION UNLESS OTHERWISE NOTED.
3. ALL WORK SHALL BE DONE IN ACCORDANCE WITH ALL LOCAL, STATE, COUNTY CODE REGULATIONS, O.S.H.A., AND THE AMERICAN WITH DISABILITIES ACT (ADA). REFER TO THE CODE PLAN FOR MORE INFORMATION.
4. REFER TO SIDING MANUFACTURER INSTALLATION INSTRUCTIONS AND STANDARD DETAILS
5. CONTRACTOR TO VERIFY/COORDINATE CODE REQUIRED WINDOW EGRESS REQUIREMENTS

1 NORTH ELEVATION

2 SIDE PORCH DETAIL

3 REAR PORCH DETAILS

4 NORTH ELEVATION CORNER

ARCHITECT:

4545 architecture

2761 E. JEFFERSON AVE
STE 302
DETROIT, MI 48207
P. 313.454.4545
TIM.FLINTOFF@4545ARCHITECTURE.COM

CONSULTANT:

Project :

97 ARDEN PARK
EXTERIOR RENOVATION

97 ARDEN PARK BLVD.,
DETROIT, MI 48202

Issued for :

HDC 08/18/2025

Drawn by :
ANJ

Check by :
TRF

Sheet Title :
EXTERIOR
ELEVATION

Project No. :
2025034

Sheet No. :
A3.3

DO NOT SCALE DRAWINGS | ©2025 Timothy Flintoff Architect, PLLC

Docusign Envelope ID: D964FA59-28E9-4B16-AB5D-9AA9B93217E1

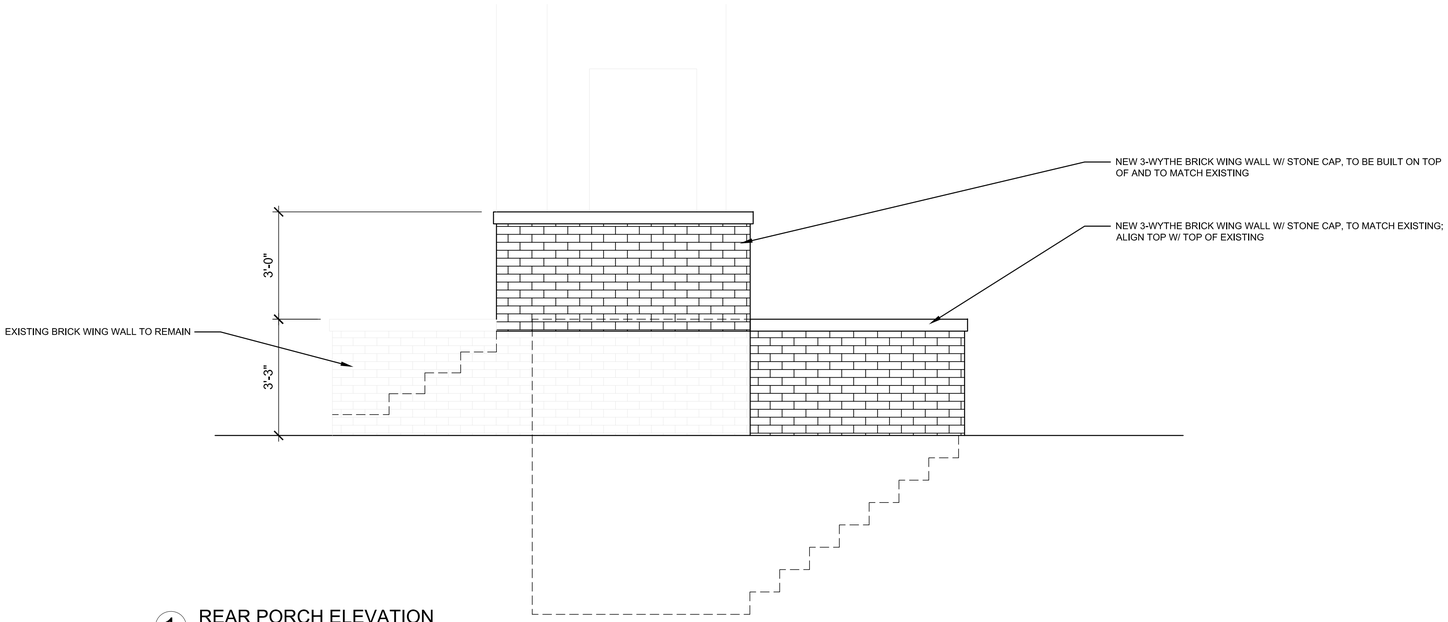

1 REAR PORCH ELEVATION
SCALE: 1/2"=1'-0"

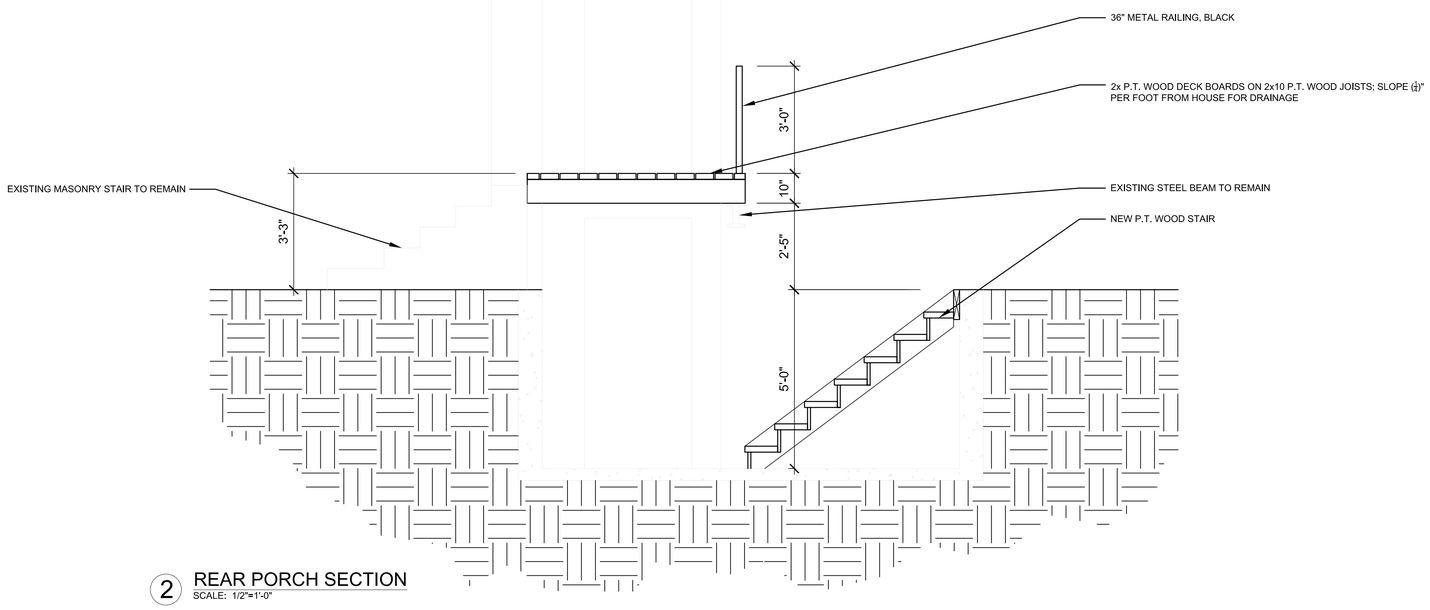

2 REAR PORCH SECTION
SCALE: 1/2"=1'-0"

GENERAL SECTION/ELEVATION NOTES:

1. THIS DRAWING IS DIAGRAMMATIC AND SHOULD BE USED TO DETERMINE THE DESIGN INTENT. THE CONTRACTOR IS RESPONSIBLE FOR THE COMPLETE SET OF WORK AS INDICATED AND SHALL FIELD VERIFY ALL WORK, COORDINATE ALL DRAWINGS / NEW WORK AND SHALL NOTIFY ARCHITECT IMMEDIATELY OF ANY DISCREPANCIES IN THE DOCUMENTS BEFORE PROCEEDING. FAILURE TO DO SO WILL RESULT IN THE CONTRACTOR TAKING FULL RESPONSIBILITY AND LIABILITY FOR SAID DISCREPANCIES.
2. ALL DIMENSIONS ARE SHOWN FROM FINISH FACE TO FINISH FACE OF PARTITION UNLESS OTHERWISE NOTED.
3. ALL WORK SHALL BE DONE IN ACCORDANCE WITH ALL LOCAL, STATE, COUNTY CODE REGULATIONS, O.S.H.A., AND THE AMERICAN WITH DISABILITIES ACT (ADA). REFER TO THE CODE PLAN FOR MORE INFORMATION.
4. REFER TO SIDING MANUFACTURER INSTALLATION INSTRUCTIONS AND STANDARD DETAILS
5. CONTRACTOR TO VERIFY/COORDINATE CODE REQUIRED WINDOW EGRESS REQUIREMENTS

ARCHITECT:
4545 architecture
2761 E. JEFFERSON AVE
STE 302
DETROIT, MI 48207
P. 313.454.4545
TIM.FLINTOFF@4545ARCHITECTURE.COM

CONSULTANT:

Project :
97 ARDEN PARK
EXTERIOR RENOVATION

97 ARDEN PARK BLVD.,
DETROIT, MI 48202

Issued for :
HDC 08/18/2025

Drawn by :
ANJ

Check by :
TRF

Sheet Title :
REAR PORCH
SECTION + ELEVATION

Project No. :
2025034

Sheet No. :
A4.1

DO NOT SCALE DRAWINGS | ©2025 Timothy Flintoff Architect, PLLC

Docusign Envelope ID: D964FA59-28E9-4B16-AB5D-9AA9B93217E1

RAILING:
Trex Signature X-Series in Charcoal Black (BK) with stainless steel cable infill

Railing

Metal and composite collections make it easy to find your style and frame your view

More Material Options

From traditional composites to sleek metal offerings, our wide selection of safe and stylish railing options offers more choices for your build.

Elevated Style

With cable, mesh, glass and baluster infill options, you can achieve a look that suits your style and is a fashionable alternative to standard wood or vinyl railing.

RAILING:
Trex Signature in Classic White (WT)

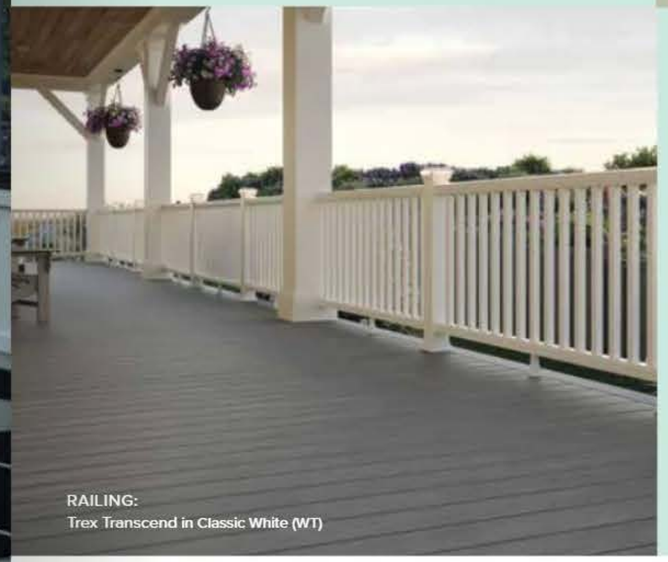

RAILING:
Trex Transcend in Classic White (WT)

Durability to Match our Decking

Built with the same outstanding durability as Trex decking—your outdoor railing won't rot, warp, peel or splinter.

Easy Installation

Deck railing kits, pre-assembled panels and online resources make installation simple.

The Anatomy of Railing

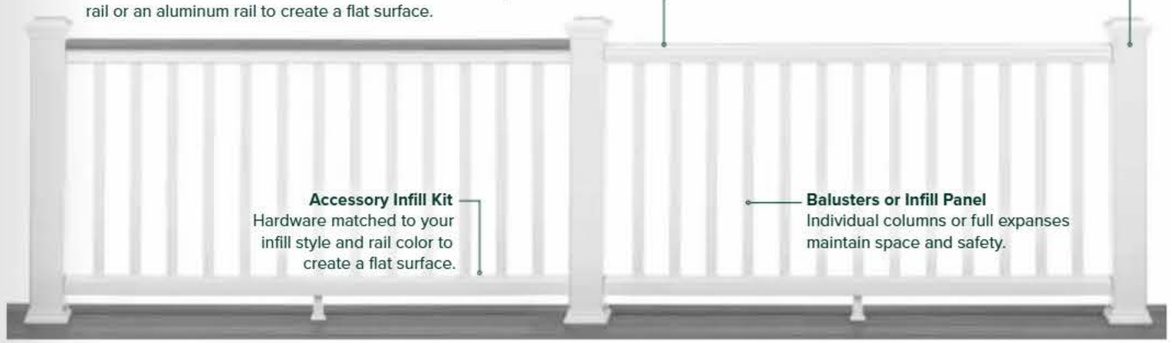

Docusign Envelope ID: D964FA59-28E9-4B16-AB5D-9AA9B93217E1

Trex Signature® X-SERIES™ RAILING

$$$$$ 50 YEARS ★★★★★

Stainless steel cable infill

Frameless glass infill

Trex Signature® ALUMINUM RAILING

$$$$ – $$$ 50 YEARS ★★★★★

Square balusters

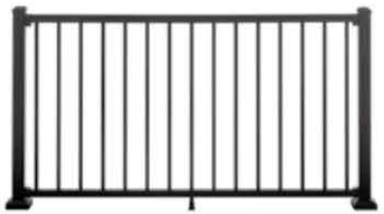

Rod rail infill

Trex Transcend® COMPOSITE RAILING

$$$ 35 YEARS ★★★★

Round aluminum balusters

Square composite balusters

Trex Select® COMPOSITE RAILING

$$ 25 YEARS ★★

Classic rail with round aluminum balusters

T-Rail with square composite balusters

Trex Select™ ALUMINUM RAILING

$$ 25 YEARS ★★

Square balusters

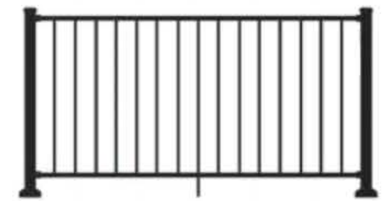

T-Rail with round aluminum balusters

Trex Enhance™ STEEL RAILING

$ 15 YEARS ★

Square balusters

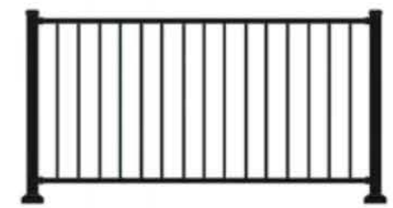

Stainless steel mesh infill

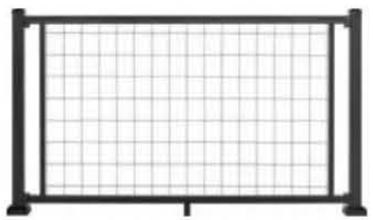

Mix and match colors

Glass infill

Cocktail rail

Trex Select™ steel mesh railing

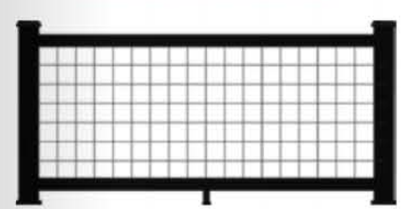

PRICE

$ – $$$$$

LIMITED RESIDENTIAL WARRANTY COVERAGE

50 YEARS · 35 YEARS · 25 YEARS · 15 YEARS

RAILING DESIGN FLEXIBILITY

★ – ★★★★★

Get inspired by photos of some of our favorite decking and railing pairings at trex.com/railing.

Docusign Envelope ID: D964FA59-28E9-4B16-AB5D-9AA9B93217E1

Clean, sleek, elegant railing to let your view shine through

Made from premium aluminum, with four unique infills to complement any design aesthetic.

RAILING:
Trex Signature in Charcoal Black (BK) with glass infill
DECKING:
Trex Transcend in Havana Gold (HG)

50 YEARS

$$$$ – $$$

★★★★★
DESIGN FLEXIBILITY

TrexSignature®
ALUMINUM RAILING

Effortless style, exceptional strength

Charcoal Black

Classic White

Bronze

See detailed product specs on page 38 for color availability

RAILING:
Trex Signature in Bronze (BZ) with mesh infill
DECKING:
Trex Transcend in Havana Gold (HG)

Square balusters

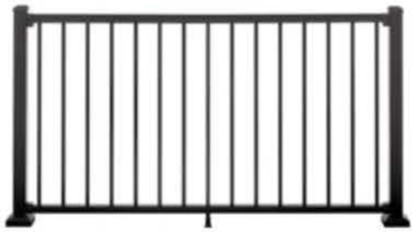

Round balusters

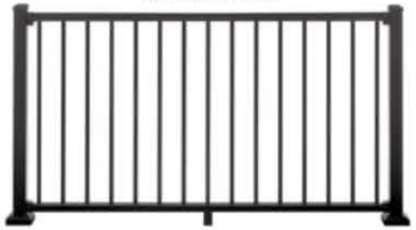

Rod rail infill

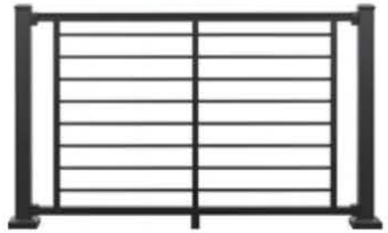

Stainless steel mesh infill

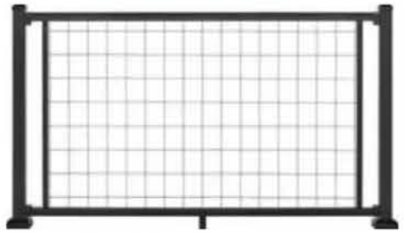

Glass infill

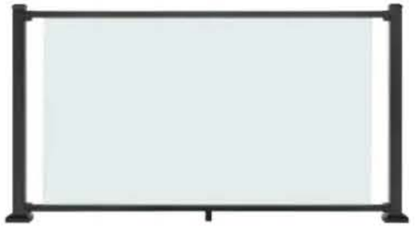

Docusign Envelope ID: D964FA59-28E9-4B16-AB5D-9AA9B93217E1

FEATURES

CASEMENT WINDOWS

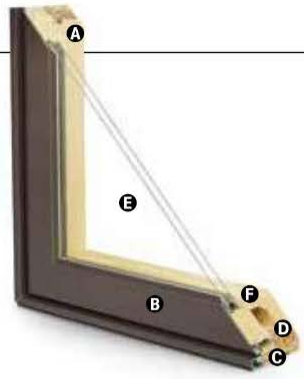

FRAME & SASH

A Select wood components are kiln dried and treated with water/insect repellent and preservative. Interior wood surfaces are available in pine, mixed grain Douglas fir, cherry, hickory, mahogany*, maple, oak, walnut, alder or vertical grain Douglas fir. Interior surfaces are available unfinished or factory primed. Optional factory-applied finishes are available in a variety of stains and paints.

B Wood components are fitted with aluminum extrusions on the exterior. 50 exterior colors that meet AAMA 2604 and 2605 specifications are available, as well as custom colors. Also available is a selection of seven exterior anodized options. Integral, butyl-backed corner keys provide a positive, tight seal.

Vinyl installation flanges are pre-applied into a kerf on the frame exterior to facilitate installation. Optional aluminum flanges or metal installation clips are available.

C A Fibrex® material thermal barrier encompasses the interior perimeter of the frame and is a neutral beige color.

D A continuous perimeter bulb weatherstrip around the frame is positioned on the Fibrex material thermal barrier and provides solid surface contact with the sash.

A secondary bulb weatherstrip is applied on three sides of the sash into a stand-alone kerf on the aluminum extrusion. Available in white or optional black.

GLASS

E High-Performance Low-E4® glass with a low-conductivity spacer. Triple-pane glass, tinted, clear dual-pane, high-altitude glass and other special glazing options are available.

F Glass is fixed in place from the interior with wood stops that can be removed for easy reglazing if necessary. Glass stops available in ovolo (colonial) and contemporary profiles.

GLASS SPACERS available in black, white and stainless steel.

HARDWARE

Equipped with a stainless steel gear operator, concealed hinges and hinge track. Arch casement units use stainless steel piano hinges.

Locks, handles and operator covers are available in 10 finishes and can be shipped separately closer to job completion.

Sash Locks

Sash Lock

Concealed sash locks (multi-point on units taller than 2'-8") provide a positive lock by operating one convenient lever. Stainless steel keepers resist corrosion.** Available in hardware finishes shown below.

HARDWARE OPTIONS

Operator Handle & Cover

Antique Brass | **Black**
Polished Chrome | Bronze
Gold | Oil Rubbed Bronze
Pewter | **Bright Brass**
Brushed Chrome | White

Bold name denotes finish shown.

HARDWARE FINISHES

Oil rubbed bronze is a "living" finish that will change with time and use.

EXTERIOR & INTERIOR OPTIONS

EXTERIOR COLORS 50 exterior colors, 7 anodized finishes and custom colors. See exterior colors on page 11.

INTERIOR WOOD SPECIES

FACTORY-FINISHED INTERIORS

Interior custom stains, paints and color matching available.

Naturally occurring variations in grain, color and texture of wood make each window one of a kind.

All factory-finished options are shown on pine.

Painted options available on pine. Dark bronze and black painted options available on pine or maple. Anodized silver painted option available on maple only.

INTERIOR PAINTED OPTIONS

*Actual wood species is either Sapele or Sipo, both non-endangered species grown in Africa, with color and characteristics similar to Central American mahoganies.

** Visit andersenwindows.com/warranty for details.

Printing limitations prevent exact replication of colors and finishes. Please see your Andersen supplier for actual color and finish samples.

Docusign Envelope ID: D964FA59-28E9-4B16-AB5D-9AA9B93217E1

ACCESSORIES Sold Separately

CASEMENT WINDOWS

HARDWARE

Power Operator

Power operators are available in bronze, white, black or gold.

Window Opening Control Device Kit

An optional Window Opening Control Device Kit is available, which limits opening the sash to less than 4" when the window is first opened. Available in stone and white.

Construction Hardware

Construction locks and operator handles keep your permanent window hardware away from the construction process and possible damage yet allow operation of windows during construction.

SENSORS

VeriLock & Open/Closed Sensors DISCONTINUED

they detect whether the windows are locked or unlocked* — a feature no other sensors can provide.

Open/Closed Sensors

Wireless open/closed sensors are available in four colors.

See page 27 for Smart Home options.

PRIVACY OPTIONS

System 3 Blinds

A ⅝" aluminum slat blind is mounted to an extruded aluminum blind panel and applied to the window, creating a triple-glazed window boasting privacy and energy efficiency. Available in three colors. Blind panels are offered in white, tan, gold or an optional wood veneer to match your interior.

System 3 Shades

Pleated fabric shades are available in four colors to effortlessly and beautifully filter the light.

See page 25 for more information on our blinds and shades.

INSECT SCREENS

TruScene® Insect Screens

Andersen® TruScene insect screens let in over 25% more fresh air and provide 50% greater clarity than conventional Andersen insect screens, all while keeping out unwanted small insects. Frames are available in painted aluminum or wood-veneered options.

Retractable Insect Screens

Retractable insect screen available in wood-veneered frame options.

Conventional Insect Screens

Charcoal fiberglass screen mesh fits into an aluminum frame in colors of bronze, white or gold as well as optional black. Aluminum screen mesh and wood-veneered insect screen also available.

See page 24 for more information on our insect screens.

GRILLES

Full Divided Light

Permanent interior and exterior grilles with grille spacer bars between two panes of glass. Available in ⅝", ⅞", 1 ⅛", 1 ½", or 2 ¼" widths and ovolo or contemporary profile. Ovolo profile shown below, not all widths are pictured.

⅝"

⅞"

1 ⅛"

1 ½"

Simulated Divided Light

Permanent exterior and interior grilles without grille spacer bars. Available in ⅝", ⅞", 1 ⅛", 1 ½", or 2 ¼" widths and ovolo or contemporary profile. Ovolo profile shown below, not all widths are pictured.

⅞"

Finelight™ Grilles-Between-the-Glass

Available in ⅝" flat or 1" contoured aluminum profiles. Two-tone colors of pebble tan/colony white, sierra bronze/colony white or forest green/colony white are available on the 1" profile.

⅝" Flat

1" Contoured

Removable Interior Wood Grilles

Removable interior wood grilles are available in a ⅞" width and ovolo or contemporary profiles. Optional surround for removable grille and permanent exterior grilles also available. Ovolo profile shown below.

⅞"

See page 22 for more information on grilles.

*When properly configured and maintained with a professionally installed security system and/or self monitoring system compatible with Honeywell® 5800 controls. See your Andersen supplier for more information.

Docusign Envelope ID: D964FA59-28E9-4B16-AB5D-9AA9B93217E1

Double-Hung Windows

Double-Hung

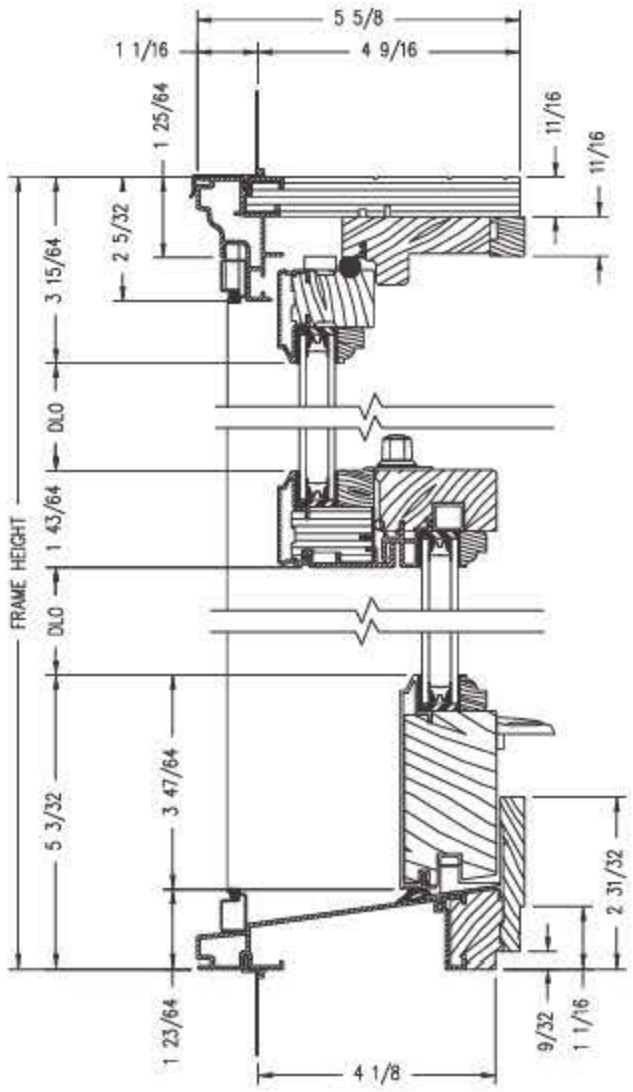

Vertical Section

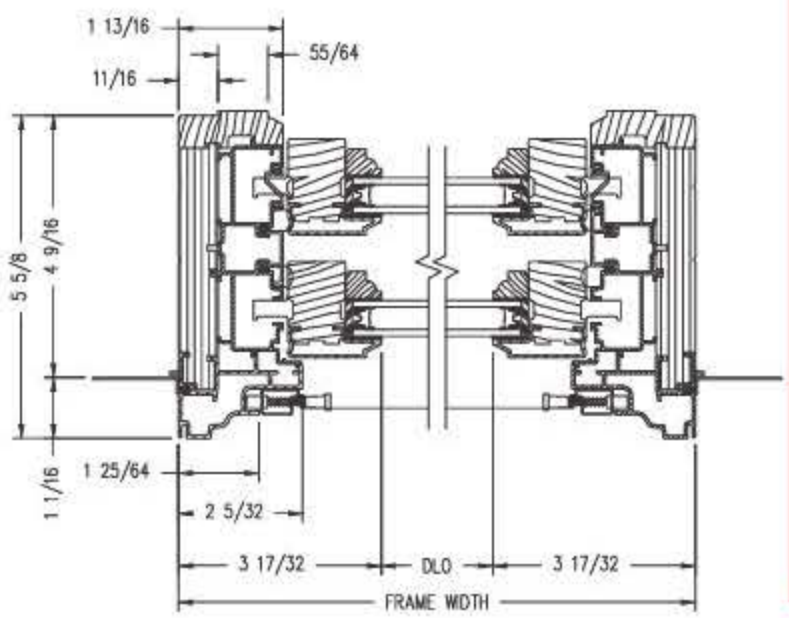

Horizontal Section

Double-Hung Picture

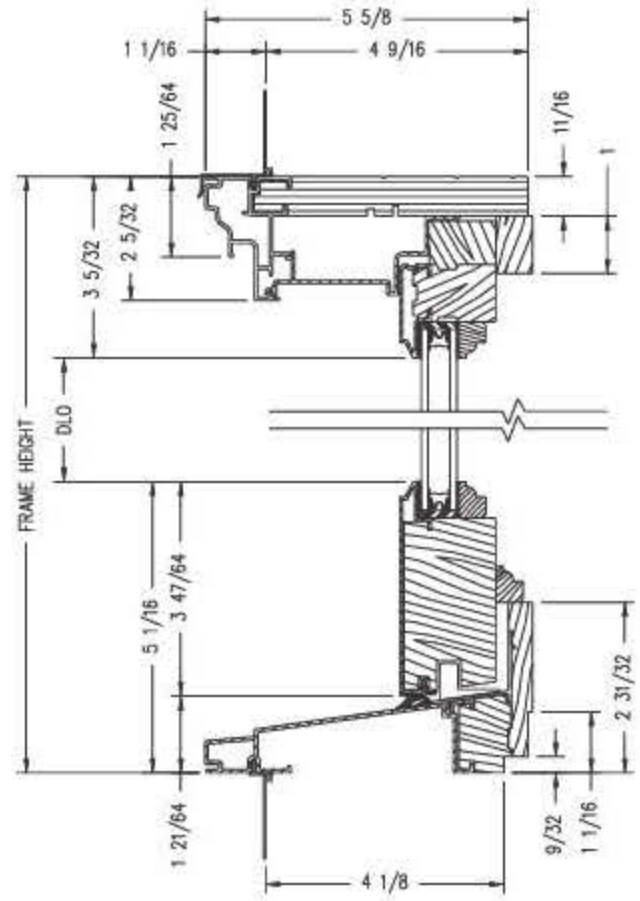

Vertical Section

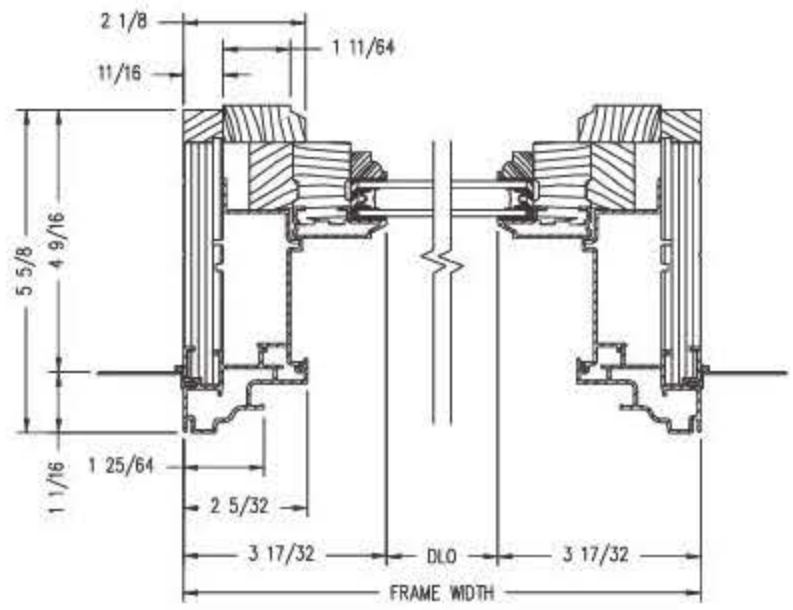

Horizontal Section

Shown with ovolo (colonial) glass stops.

PROPER INSTALLATION AND MAINTENANCE OF E-SERIES PRODUCTS IS ESSENTIAL TO ATTAIN OPTIMUM PERFORMANCE AND OPERATION. WRITTEN INSTALLATION INSTRUCTIONS THAT PROVIDE GUIDELINES FOR PROPER INSTALLATION ARE AVAILABLE BY VISITING ANDERSENWINDOWS.COM. CUSTOM SIZES ARE AVAILABLE. CONTACT YOUR LOCAL SUPPLIER FOR MORE INFORMATION. DRAWINGS ARE NOT TO SCALE.

Docusign Envelope ID: D964FA59-28E9-4B16-AB5D-9AA9B93217E1

50 EXTERIOR COLORS

Our exclusive line of exterior colors offers a broad spectrum of quality, baked-on, silicone polyester enamel exteriors that meet AAMA 2604 specification. AAMA 2605 color compliance is also available.* Our limited warranty covers exteriors for 10 years against chalking and color change and 20 years against cracking, checking, peeling, flaking, blistering and loss of adhesion.**

EXTERIOR COLORS

Colony White, White, Abalone, Balsa White, Canvas, Maple Syrup, Harvest Gold, Prairie Grass, Flagstone, Sandtone, Pebble Tan

Carmel, Terratone, Hot Chocolate, Bourbon, Acorn, Coffee Bean, Cocoa Bean, Sierra Bronze, Dark Bronze, Clay Canyon, Red Rock

Cardinal, Bing Cherry, Fire Engine Red, Cinnamon Toast, Olive, Sage, Billiard Green, Moss, Forest Green, Mallard Green, Spearmint

Aquamarine, Patina, Sky Blue, Country Blue, Blue Denim, Watercolor Blue, Caribbean Blue, Slate, Moody Blue, Stormy Blue, Dove Gray

Harbor Mist, Yorktown Pewter, Smokey Gray, Mystic Gray, Dark Ash, Black

7 ANODIZED FINISHES

Choose from a spectacular selection of anodized finishes. Anodizing is a process that penetrates the aluminum like a stain penetrates wood. The result is a rich, lustrous metallic appearance that cannot peel or flake and is not affected by sunlight.** This process produces a harder, more durable finish that makes this a perfect choice for high-traffic areas in commercial or residential buildings.

Black, Dark Bronze, Copper, Medium Bronze, Light Bronze, Champagne, Clear Anodized

*AAMA 2605 finishes are available in any of our 50 colors or select a custom color of your choice.
**Visit andersenwindows.com/warranty for details.
Printing limitations prevent exact color and finish replication. See your Andersen supplier for actual color and finish samples.

Docusign Envelope ID: D964FA59-28E9-4B16-AB5D-9AA9B93217E1

4545 architecture

August 18, 2025

97 Arden Park Blvd.,
Detroit, MI 48202

RE: 97 Arden Park Blvd. Historic District Commission Submission

Existing Photos

Front Elevation

2761 E. Jefferson, Suite 302, Detroit, MI 48207

e | tim.flintoff@4545architecture.com • c | 248.320.6098 • w | 4545architecture.com

Docusign Envelope ID: D964FA59-28E9-4B16-AB5D-9AA9B93217E1

4545 architecture

Walkway Steps

2761 E. Jefferson, Suite 302, Detroit, MI 48207

e | tim.flintoff@4545architecture.com • c | 248.320.6098 • w | 4545architecture.com

Docusign Envelope ID: D964FA59-28E9-4B16-AB5D-9AA9B93217E1

4545 architecture

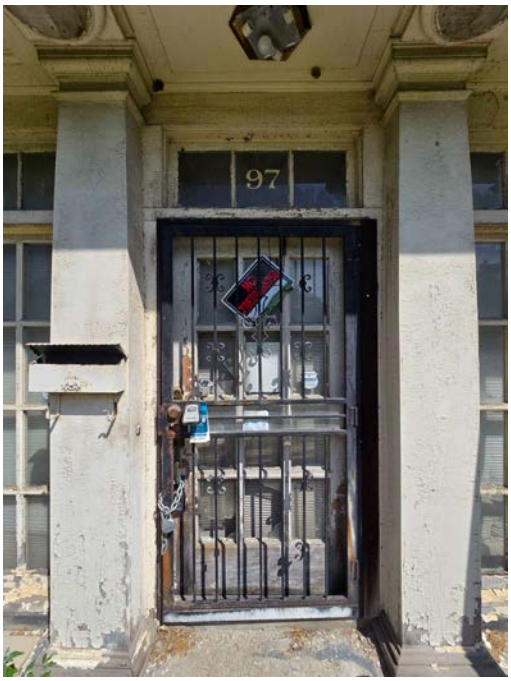

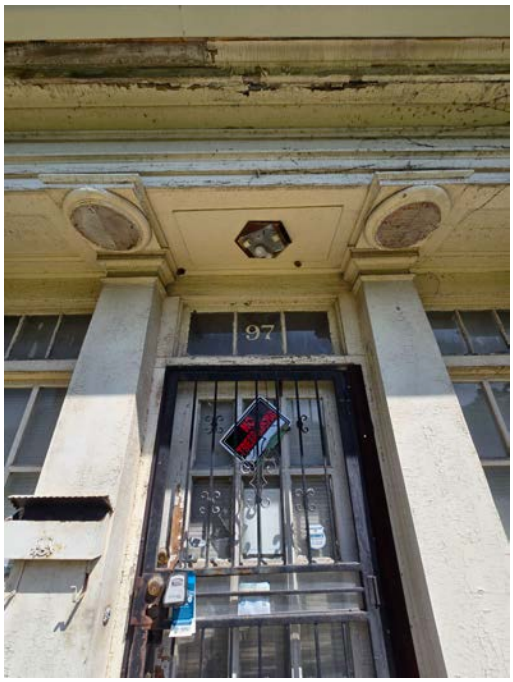

Front Entry Detail

2761 E. Jefferson, Suite 302, Detroit, MI 48207

e | tim.flintoff@4545architecture.com • c | 248.320.6098 • w | 4545architecture.com

Docusign Envelope ID: D964FA59-28E9-4B16-AB5D-9AA9B93217E1

4545 architecture

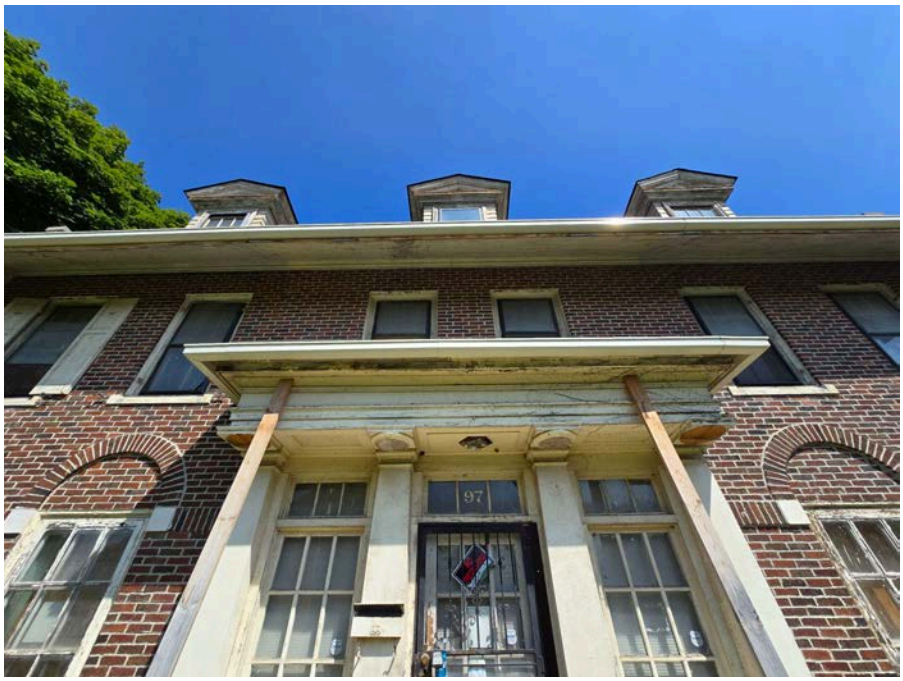

Front Entry Detail

Note Missing Column Bases

2761 E. Jefferson, Suite 302, Detroit, MI 48207

e | tim.flintoff@4545architecture.com • c | 248.320.6098 • w | 4545architecture.com

Docusign Envelope ID: D964FA59-28E9-4B16-AB5D-9AA9B93217E1

4545 architecture

Typical Front Window

2761 E. Jefferson, Suite 302, Detroit, MI 48207

e | tim.flintoff@4545architecture.com • c | 248.320.6098 • w | 4545architecture.com

Docusign Envelope ID: D964FA59-28E9-4B16-AB5D-9AA9B93217E1

4545 architecture

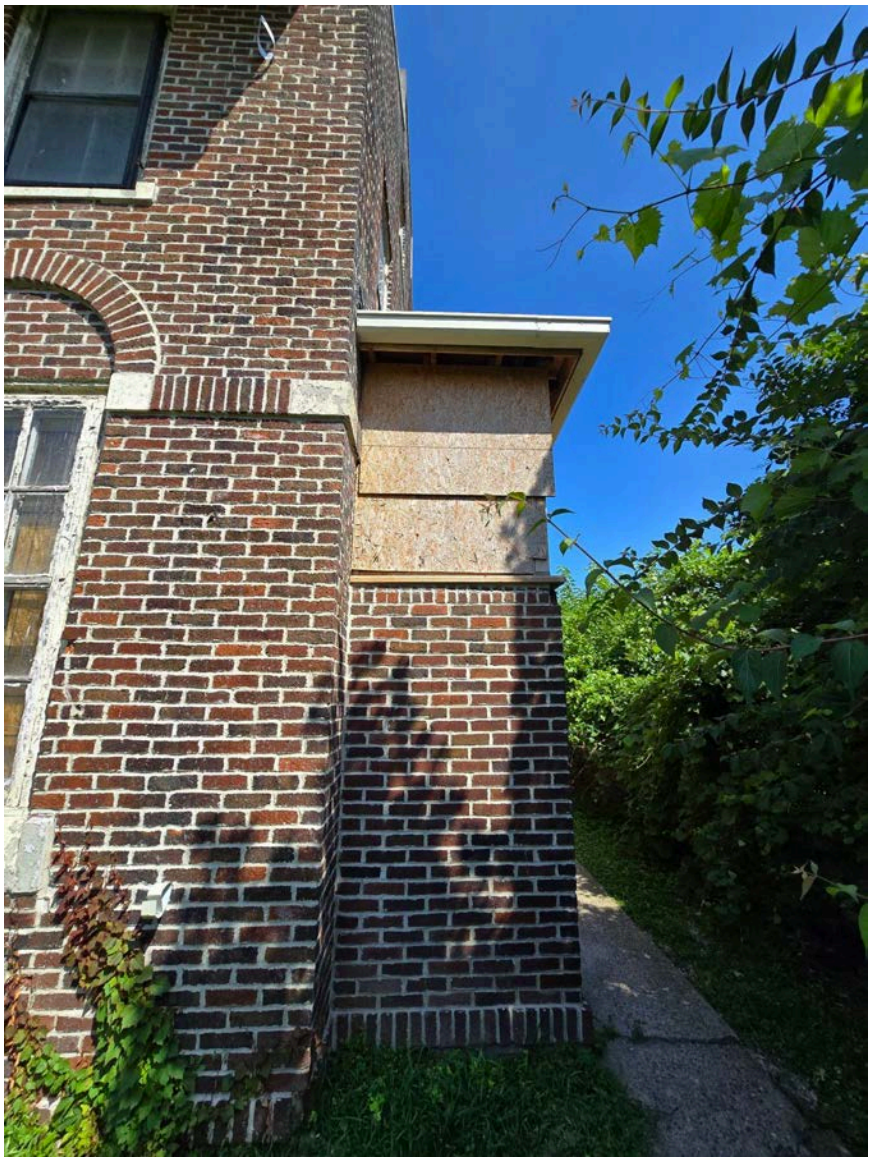

East Bay - South Elevation

2761 E. Jefferson, Suite 302, Detroit, MI 48207

e | tim.flintoff@4545architecture.com • c | 248.320.6098 • w | 4545architecture.com

Docusign Envelope ID: D964FA59-28E9-4B16-AB5D-9AA9B93217E1

4545 architecture

East Bay

2761 E. Jefferson, Suite 302, Detroit, MI 48207

e | tim.flintoff@4545architecture.com • c | 248.320.6098 • w | 4545architecture.com

Docusign Envelope ID: D964FA59-28E9-4B16-AB5D-9AA9B93217E1

4545 architecture

East Bay

2761 E. Jefferson, Suite 302, Detroit, MI 48207

e | tim.flintoff@4545architecture.com • c | 248.320.6098 • w | 4545architecture.com

Docusign Envelope ID: D964FA59-28E9-4B16-AB5D-9AA9B93217E1

4545 architecture

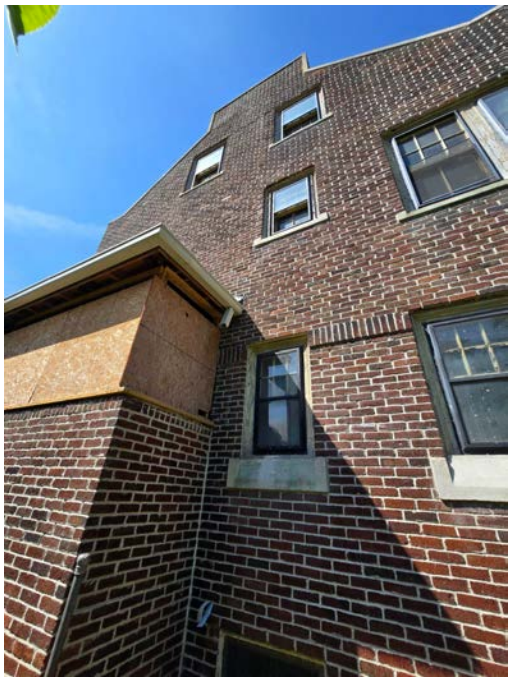

East Elevation

2761 E. Jefferson, Suite 302, Detroit, MI 48207

e | tim.flintoff@4545architecture.com • c | 248.320.6098 • w | 4545architecture.com

Docusign Envelope ID: D964FA59-28E9-4B16-AB5D-9AA9B93217E1

4545 architecture

Rear Porch - East Elevation

2761 E. Jefferson, Suite 302, Detroit, MI 48207

e | tim.flintoff@4545architecture.com • c | 248.320.6098 • w | 4545architecture.com

Docusign Envelope ID: D964FA59-28E9-4B16-AB5D-9AA9B93217E1

4545 architecture

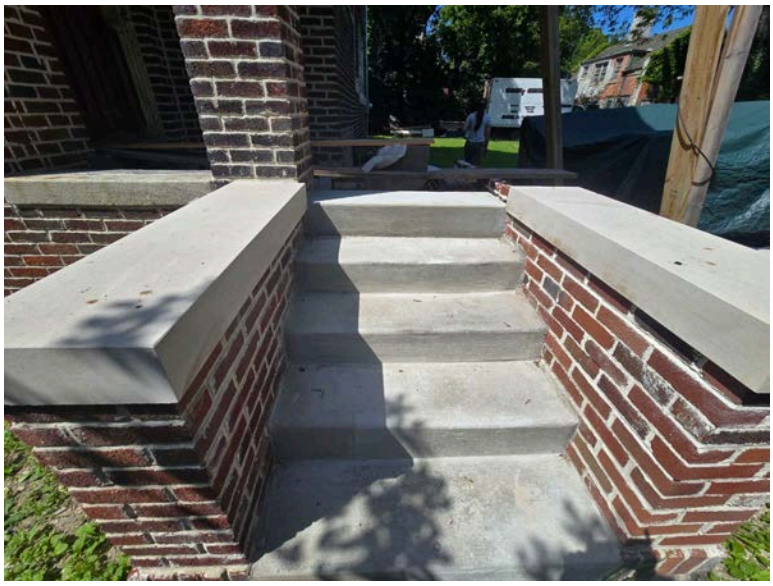

Rear Porch Stair and Wing Walls

2761 E. Jefferson, Suite 302, Detroit, MI 48207

e | tim.flintoff@4545architecture.com • c | 248.320.6098 • w | 4545architecture.com

Docusign Envelope ID: D964FA59-28E9-4B16-AB5D-9AA9B93217E1

4545 architecture

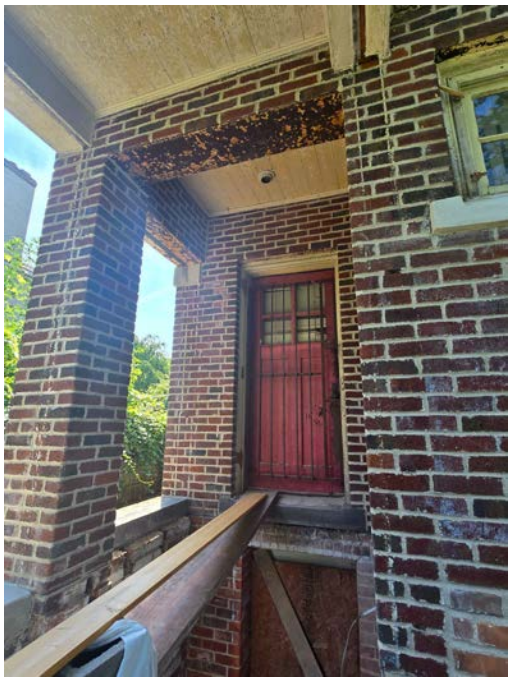

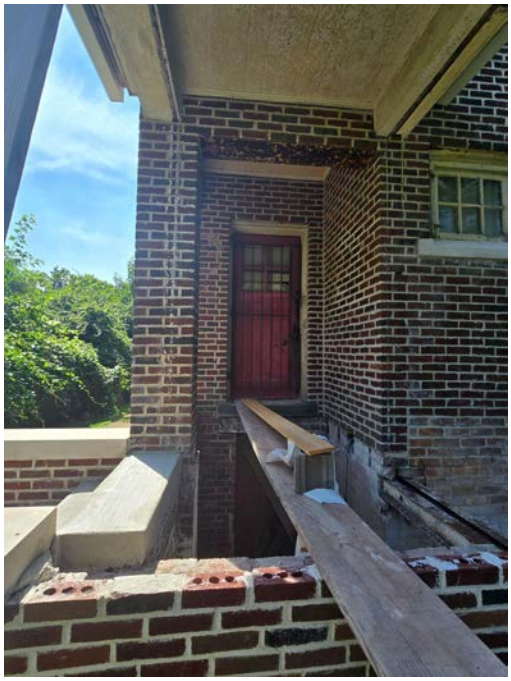

Rear Porch

2761 E. Jefferson, Suite 302, Detroit, MI 48207

e | tim.flintoff@4545architecture.com • c | 248.320.6098 • w | 4545architecture.com

Docusign Envelope ID: D964FA59-28E9-4B16-AB5D-9AA9B93217E1

4545 architecture

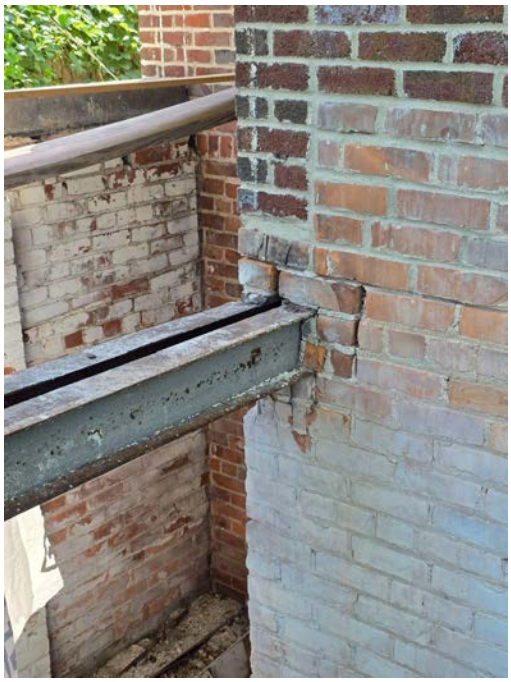

Rear Porch

2761 E. Jefferson, Suite 302, Detroit, MI 48207

e | tim.flintoff@4545architecture.com • c | 248.320.6098 • w | 4545architecture.com

Docusign Envelope ID: D964FA59-28E9-4B16-AB5D-9AA9B93217E1

4545 architecture

Rear Elevation

2761 E. Jefferson, Suite 302, Detroit, MI 48207

e | tim.flintoff@4545architecture.com • c | 248.320.6098 • w | 4545architecture.com

Docusign Envelope ID: D964FA59-28E9-4B16-AB5D-9AA9B93217E1

4545 architecture

Rear Elevation - Windows

2761 E. Jefferson, Suite 302, Detroit, MI 48207

e | tim.flintoff@4545architecture.com • c | 248.320.6098 • w | 4545architecture.com

Docusign Envelope ID: D964FA59-28E9-4B16-AB5D-9AA9B93217E1

4545 architecture

Rear Elevation - Interior Corner

2761 E. Jefferson, Suite 302, Detroit, MI 48207

e | tim.flintoff@4545architecture.com • c | 248.320.6098 • w | 4545architecture.com

Docusign Envelope ID: D964FA59-28E9-4B16-AB5D-9AA9B93217E1

4545 architecture

West Porch - North Elevation

2761 E. Jefferson, Suite 302, Detroit, MI 48207

e | tim.flintoff@4545architecture.com • c | 248.320.6098 • w | 4545architecture.com

Docusign Envelope ID: D964FA59-28E9-4B16-AB5D-9AA9B93217E1

4545 architecture

West Elevation

2761 E. Jefferson, Suite 302, Detroit, MI 48207

e | tim.flintoff@4545architecture.com • c | 248.320.6098 • w | 4545architecture.com

Docusign Envelope ID: D964FA59-28E9-4B16-AB5D-9AA9B93217E1

4545 architecture

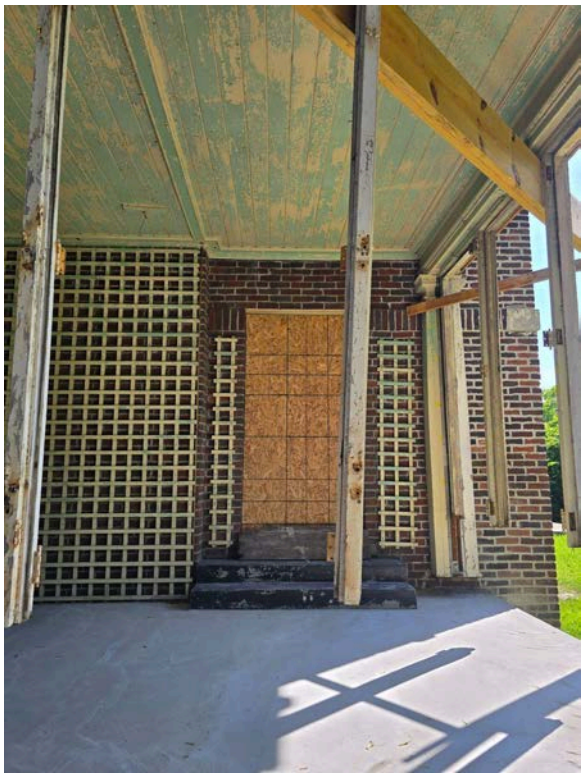

West Porch - Entries

2761 E. Jefferson, Suite 302, Detroit, MI 48207

e | tim.flintoff@4545architecture.com • c | 248.320.6098 • w | 4545architecture.com

Docusign Envelope ID: D964FA59-28E9-4B16-AB5D-9AA9B93217E1

4545 architecture

West Porch - South View

2761 E. Jefferson, Suite 302, Detroit, MI 48207

e | tim.flintoff@4545architecture.com • c | 248.320.6098 • w | 4545architecture.com

Docusign Envelope ID: D964FA59-28E9-4B16-AB5D-9AA9B93217E1

4545 architecture

Historic Designation Photos - 1981

2761 E. Jefferson, Suite 302, Detroit, MI 48207

e | tim.flintoff@4545architecture.com • c | 248.320.6098 • w | 4545architecture.com

Docusign Envelope ID: D964FA59-28E9-4B16-AB5D-9AA9B93217E1

4545
architecture

2761 E. Jefferson, Suite 302, Detroit, MI 48207

e | tim.flintoff@4545architecture.com • c | 248.320.6098 • w | 4545architecture.com