MINUTES
DETROIT HISTORIC DISTRICT COMMISSION REGULAR MEETING
May 13, 2026
Coleman A. Young Municipal Center, Suite 808

I CALL TO ORDER

Chair Franklin called the meeting to order at 4:35 p.m.

II ROLL CALL

HISTORIC DISTRICT COMMISSION		PRESENT	ABSENT
Tiffany Franklin	Chair	X	
James Hamilton	Commissioner		X
Marques King	Commissioner		X
Allan Machielse	Vice Chair	X	
William Marquez	Commissioner	X	
Adrea Simmons	Commissioner	X	
STAFF			
Audra Dye	PDD	X	
Garrick Landsberg (Director)	PDD	X	
Jennifer Ross	PDD	X	
Lise St James	PDD	X	
Bilqees Salie	PDD	X	
Ellen Thackery	PDD	X	

III APPROVAL OF THE AGENDA

ACTION
Commissioner Machielse moved to move the application for 2900 Cass to the consent agenda.
Commissioner Simmons: SUPPORT.

ROLL CALL
Commissioner Franklin: AYE
Commissioner Machielse: AYE
Commissioner Marquez: AYE
Commissioneer Simmons: AYE

Motion passed, 4-0.

ACTION
Commissioner Machielse moved to approve the agenda as amended.
Commissioner Marquez: SUPPORT

ROLL CALL
Commissioner Franklin: AYE
Commissioner Machielse: AYE
Commissioner Marquez: AYE
Commissioner Simmons: AYE

Ayes: 4 Nays: 0
MOTION PASSED 4-0

IV APPROVAL OF MEETING MINUTES

ACTION
Commissioner Machielse moved to approve the meeting minutes for the March 11, 2026 meeting.
Commissioner Simmons supported.

ROLL CALL:
Commissioner Franklin: AYE
Commissioner Machielse: AYE
Commissioner Marquez: AYE
Commissioner Simmons: AYE

MOTION PASSED, 4-0.

V REPORTS

Director Landsberg let the commission know that the search for the new director of the Planning and Development Department would be concluding soon.

VI APPROVAL OF APPLICATIONS SUBJECT TO CONSENT AGENDA

ACTION
Commissioner Machielse moved to approve the consent agenda.
Commissioner Simmons: SUPPORT.

ROLL CALL
Commissioner Franklin: AYE
Commissioner Machielse: AYE
Commissioner Marquez: AYE
Commissioner Simmons: AYE

MOTION PASSED 4-0.

VII POSTPONED APPLICATIONS

None

VIII EFFECTS OF CITY OR CITY-ASSISTED PROJECTS (ADVISORY DETERMINATIONS)

None

IX SITE PLAN REVIEWS (per Section 50-3-204 of the 2019 Detroit City Code)

3475-3507 & 3466-3490 Lincoln – SPR2026-00023 – Within and adjacent to Woodbridge Farms HD & adjacent to Trumbull Avenue Presbyterian Church HD

Staff report.

ACTION
Commissioner Simmons moved that no comments be returned in response to HDC involvement in the site plan review for 3475 Lincoln, SPR2026-00023.

Commissioner Marquez: SUPPORTED.

ROLL CALL:
Commissioner Franklin: AYE
Commissioner Machielse: AYE
Commissioner Marquez: AYE
Commissioner Simmons: AYE

Ayes: 4 Nays: 0
MOTION PASSED, 4-0

8325 E Jefferson—SLU2026-00038—Indian Village--JR

Staff report.

ACTION
Commissioner Marquez moved that no comments be returned in response to HDC involvement in the site plan review SLU2026-00038 for 8325 E Jefferson.

Commissioner Machielse: SUPPORTED.

ROLL CALL:
Commissioner Franklin: AYE
Commissioner Machielse: AYE
Commissioner Marquez: AYE
Commissioner Simmons: AYE

Ayes: 4 Nays: 0
MOTION PASSED, 4-0

4454 Woodward—SPR2026-00024—adjacent to Garfield Building HD--JR

Staff report.

ACTION

Commissioner Machielse moved that no comments be returned in response to HDC involvement in the site plan review SLU2026-00024 for 4454 Woodward.

Commissioner Simmons: SUPPORTED.

ROLL CALL:
Commissioner Franklin: AYE
Commissioner Machielse: AYE
Commissioner Marquez: AYE
Commissioner Simmons: AYE

Ayes: 4 Nays: 0
MOTION PASSED, 4-0

X APPLICATIONS SUBJECT TO PUBLIC HEARING

***1616 Chicago – HDC2026-00139 – Boston-Edison HD –** JR **–** Demolish rear two-story wing,* erect rear two-story wing

Staff report.

Present and sworn in is applicant/homeowner Everado Morales and contractor William Wroblewski

Applicant summarized what they hoped to do—rebuild rear wing and add a wood deck where a rear concrete porch got demolished.

Chair opened the public hearing at 4:52 PM.

- No comments.

Chair closed the public hearing at 4:53 PM.

[Commission discussion, including roof change from what was there to what is proposed. Rebuilt addition will have a crawlspace. Commission wants to see a shadowline where the windows are—a little recess for the new windows from the wall plane. Commission would want to see a section drawing that shows that recess. Commission also concerned about color. Staff recommends color of windows match existing and not introduce a different color. Commissioner also mentioned exposed rafter tails and those are an important feature for the rebuilt rear addition to retain.]

ACTION
Commissioner Marquez moved that:
Having duly reviewed the complete proposed scope of **Application HDC2026-00139 for 1616 Chicago**, and having duly considered the appropriateness thereof pursuant to Chapter 21 Article II of the 2019 Detroit City Code, and MCL 399.205 of the Local Historic Districts Act, the Commission determines the proposed application WILL BE APPROPRIATE according to the standards of review set forth in the state and local legislation, and therefore ISSUES a CERTIFICATE OF APPROPRIATENESS for the proposed work.

The Certificate of Appropriateness is issued with the following conditions:

1. The upper transom needs three lights in the transom instead of just two;

2. The roof needs to be a flat roof;
3. The exposed rafter tails will be included in the new construction;
4. The window color needs to be coordinated with and approved by HDC staff;
5. A section drawing of the window details needs to be submitted to staff for review and approval showing how the window will sit in the wall cavity, the moldings, and how the moldings will meet the stucco;
6. The west wall of the rear one-story wing should be finished with true stucco to match the proposed cladding for the wing's rear wall. Staff shall be afforded the opportunity to review and approve this work item prior to the issuance of the project's permit.

Commissioner Simmons: SUPPORT.

ROLL CALL
Commissioner Franklin: AYE
Commissioner Machielse: AYE
Commissioner Marquez: AYE
Commissioner Simmons: AYE

MOTION PASSED 4-0.

1475 Longfellow – HDC2026-00192 – Boston-Edison HD – BS **–** Erect garage, install landscaping and hardscaping

Staff report.

Applicant Michael Sklenka, present and sworn in.

Mr. Sklenka stated that regarding the staff's recommendations for conditions:

- Regarding windows, he is proposing Pella Lifestyle aluminum-clad wood windows and will include those details in the building permit process;
- Regarding planting beds, planned are low-height perennials, like coneflowers;
- Regarding the heat pump, it will be located behind the building between the rear wall and the fence;
- Regarding the color for the walls, soffit, and fascia, planned is B11 Grayish Olive in Color System C to match the color of the main house.

Chair opened and closed the public hearing at 5:21 PM without comments.

ACTION
Commissioner Machielse moved:
Having duly reviewed the complete proposed scope of **Application HDC2026-00192 for 1475 Longfellow,** and having duly considered the appropriateness thereof pursuant to Chapter 21 Article II of the 2019 Detroit City Code, and MCL 399.205 of the Local Historic Districts Act, the Commission determines the proposed application WILL BE APPROPRIATE according to the standards of review set forth in the state and local legislation, and therefore ISSUES a CERTIFICATE OF APPROPRIATENESS for the proposed work.

The Certificate of Appropriateness is issued with the following conditions:

1. The garage's walls, soffits, fascia, and exterior doors shall be finished with colors that are compatible within the Historic Districts' Color Chart System, subject to staff approval.
2. A detailed section drawing with dimensions must be provided for the proposed window(s) described as having simulated divided lights.
3. Details on the proposed landscape planting beds (i.e. plant types, etc), patio at grade, and the HVAC mechanical unit must be provided.

Commissioner Simmons: SUPPORT

ROLL CALL:
Commissioner Franklin: Aye..
Commissioner Machielse: Aye.
Commissioner Marquez: Aye.
Commissioner Simmons: Aye.

MOTION PASSED 4-0.

Chair Franklin reminded the audience that the application for 2900 Cass (HDC2026-00121) was moved to the consent agenda and was approved.

892 W Boston Blvd –HDC2026-00193—Boston-Edison HD—ET—Install landscaping and hardscaping, construct pool

Staff report.

Landscape architects Patrick Funke and Brendan Britt, present and sworn in.

Chair asked about trees at the rear of the property. Applicant explained that they had hired a local arborist. Unfortunately, none of the trees were historic or original to the property and a lot of them were volunteers and poor examples like cottonwood instead of hardwood trees. The inventory of existing trees and the arborist's report is attached to the site plans. Many new trees will be added to the property as well.

Commissioner asked how much time was spent determining what elements are original. They had many historic photos and were able to determine which elements are historic and original and how the elements around the property should look, and they have access to restoration contractors as well.

Public hearing opened at 5:32 PM and closed at 5:34 PM. One public comment received from Allen Brown, adjacent property homeowner, who supports the project. Current homeowner has been very collaborative and consultative. He is glad that trees at the rear will be removed.

ACTION
Commissioner Marquez moved:

Having duly reviewed the complete proposed scope of **Application HDC2026-00193 for 892 W. Boston Blvd.**, and having duly considered the appropriateness thereof pursuant to Chapter 21 Article II of the

2019 Detroit City Code, and MCL 399.205 of the Local Historic Districts Act, the Commission determines the proposed application WILL BE APPROPRIATE according to the standards of review set forth in the state and local legislation, and therefore ISSUES a CERTIFICATE OF APPROPRIATENESS for the proposed work.

The Certificate of Appropriateness is issued with the following conditions:

1. The active chemical in Klenztone and the solution strength/the selected Klenztone product will be submitted to staff and a test patch will be administered before the stone paver cleaning begins.
2. Once a test patch is completed, staff will be provided a photo of clean stone pavers next to the proposed replacement samples for review and approval before paver work begins.
3. Any mortar used in the stone repairs needs to match historic mortar and be softer than the stone.
4. The driveway at the front of the house will be expanded by less than the proposed 5'8". The widened driveway will be no wider than 9' 6" at the sidewalk and 12' along its length and at the porte cochere.
5. The service court bricks must remain in-situ; any expansion to the driveway must use matching bricks, but the bricks cannot be sourced from the service court.
6. Dimensioned drawings for the south fountain will be submitted to staff and approved before work begins.
7. Dimensions of the current and proposed service court wall will be provided to staff, and a clear photo of the sample replacement material against the existing material will be provided to staff before work begins.

Commissioner Machielse: SUPPORTED.

ROLL CALL:
Commissioner Franklin: Aye.
Commissioner Machielse: Aye.
Commissioner Marquez: Aye.
Commissioner Simmons: Aye.

MOTION PASSED, 4-0.

XI CITY PROJECTS SUBJECT TO PUBLIC HEARING

XII PUBLIC COMMENT

Public comment opened at 5:37 PM.
David Matthews is considering purchasing property in the historic district and had questions about the process. He was given a business card for the historic district staff and encouraged to contact by email or phone.
Public comment closed at 5:46 PM.

XIII APPLICATIONS NOT SUBJECT TO PUBLIC HEARING

***470 Martin Luther King Jr. – HDC2026-00162 – Willis-Selden HD –** AD **–** Replace wood windows with aluminum windows, build retaining walls/install fencing, install CMU block in building's exterior walls*

Applicants Kahlil Assad and Assad Assad, present and sworn in.

Staff clarified that after the advisory report was posted Friday, staff met with the applicant Monday afternoon and added some information to the staff report, and then the applicant provided additional information on the day of the meeting.

Chair invited applicant to walk the Commission through late changes. Applicant distributed two stapled sets of handouts and they have been attached to these minutes.

Applicant walked through handouts and some information and explained how these windows were installed (and other work done) without HDC review. Staff clarified that this is a contributing building to the historic district.

Applicant clarified that the retaining wall of CMU topped with three courses of brick (edging a light well) was designed so that the CMU would not show once the construction activity next door (and dirt moving) was complete.

Staff stated that, regarding repainting the brick, they are recommending gentle removal, gentle continued weathering, but not repainting all of the masonry surfaces.

ACTION
Commissioner Marquez moved:
Having duly reviewed the complete proposed scope of **Application HDC2026-00162 for 470 Martin Luther King Jr. Blvd.**, and having duly considered the appropriateness thereof pursuant to Chapter 21 Article II of the 2019 Detroit City Code, and MCL 399.205 of the Local Historic Districts Act, the Commission determines the proposed application WILL BE APPROPRIATE according to the standards of review set forth in the state and local legislation, and therefore ISSUES an approval, with the following conditions:

- applicant will continue to work with staff to find the appropriate brick molding
- applicant will submit proposed color for the windows for approval
- applicant will work with staff regarding the appropriate way forward on masonry paint
- applicant will work with staff on window moldings, grilles, and lights of the windows.

Commissioner Machielse asked for clarification regarding windows and this proposed motion. Applicant clarified current situation and muntins between the glass and plans for exterior applied muntins.

Commissioner Machielse clarified that he didn't mean to hijack Commissioner Marquez's motion.

Commissioner Marquez withdrew his motion.

[Commissioner and applicant discussion of field-applied exterior muntins and their dimensions and staff

clarifying how the windows have changed over time and when specific windows were removed without approval.]

In trying to work out specific conditions, Commissioner Marqez decided that there were too many details left to be conditions, instead of having concrete details and drawings well ahead of the meeting for review. He decided to change his motion to a denial.

ACTION

Commissioner Marquez moved that:
having duly reviewed the complete proposed scope of **Application HDC2026-00162 for 470 Martin Luther King Jr. Blvd.**, and having duly considered the appropriateness thereof pursuant to Chapter 21 Article II of the 2019 Detroit City Code, and MCL 399.205 of the Local Historic Districts Act, the Commission determines the proposed application WILL NOT BE APPROPRIATE according to the standards of review set forth in the state and local legislation, and therefore ISSUES a DENIAL,

as the proposed work fails to meet the Secretary of the Interior's Standards, specifically Standards:

2) *The historic character of a property shall be retained and preserved. The removal of historic materials or alteration of features and spaces that characterize a property shall be avoided*.
5) *Distinctive features, finishes, and construction techniques or examples of craftsmanship that characterize a historic property shall be preserved.*
6) *Deteriorated historic features shall be repaired rather than replaced. Where the severity of deterioration requires replacement of a distinctive feature, the new feature shall match the old in design, color, texture, and other visual qualities and, where possible, materials. Replacement of missing features shall be substantiated by documentary, physical, or pictorial evidence.*
9) *New additions, exterior alterations, or related new construction shall not destroy historic materials that characterize the property. The new work shall be differentiated from the old and shall be compatible with the massing, size, scale, and architectural features to protect the historic integrity of the property and its environment*

And

Elements of Design # 7, 8 & 9

For the following reasons:

1. The original wood windows and brickmold, and exterior brick on all walls (variegated reddish-brown brick on outward facing walls and yellowish-white brick on interior courtyard/lightwell walls) were distinctive, historic character-defining features that date to the resource's Period of Significance.
2. The removal of the historic windows, and brick wall surface was completed without demonstration that the distinctive, character-defining components and materials were beyond reasonable repair.
3. Furthermore, the installation of aluminum windows with grilles between the glass, minimal, flat-surface exterior applied grilles, differing glass patterns and, at times window operation, that do not match the historic windows; and the use of CMU block as an exterior wall and retaining wall material; altered the features and spaces that characterize this property and changed the visual and historical relationship between the building and the other historic structures within the district.

Commissioner Simmons: SUPPORTED.

Further discussion: Director Landsberg reminded Commission that the reasons given should match their discussion and objections to the proposal. Staff will look at the objections the commission gave, and then if the applicant's updated information submitted to address the HDC's stated objections to approval does not address those stated objections, staff will not put the application back on the agenda. So, commissioner-stated objections to approval must be able to be remedied in the way that you feel moves the application to appropriateness. His recommendation to the commissioners is to discard the proposed staff conditions and create their own, related to what they want to see from the applicant. The direction to the staff, however, has to be explicit and specific.

Commissioner clarified that if the applicant withdraws, he can bring the application back with more information almost immediately. Director Landsberg stated that the applicant can withdraw at any time, and they can come right back to the Commission's next meeting if they have the needed information.

Commissioner Marquez withdrew his motion.

Applicant withdrew his application. He plans to submit new information and return on the next agenda.

Chair encouraged him to refer back to the staff report and work with staff and to make his re-submission very specific. Gutters and downspouts will be painted x color, etc., all details are in one document.

2900 Cass – HDC2026-00121 – Cass Park Local HD – GL **–** Stabilize and rehabilitate building

APPROVED VIA CONSENT AGENDA.

15091 Penrod – HDC2026-00035 – Rosedale Park HD – ET **–** Replace wood windows with aluminum-clad wood windows

Applicant Clark Bailey, present and sworn in.

Chair asked if the applicant had additional information to share or present. He did not.

The applicant proposes to replace 15 windows, replace balcony doors, and cover historic trim with aluminum. Commissioner explained that the Commission does not approve the replacement of historic materials without evidence that the materials are deteriorated beyond repair.

The applicant stated that in his opinion, these windows are deteriorated beyond repair, and they're covered with lead-based paint. One commissioner stated that he sees the pictures and he sees some deterioration in terms of needed paint and glazing, but he does not see from the photos that the windows are beyond repair.

Commissioner asked whether a company came to evaluate his windows in terms of repair; applicant stated he did. The state determined that the windows needed to be replaced, and his company, Clark's Construction, reached the same conclusion. A commissioner asked whether he or the state did an evaluation they can provide. He only has the state's bid form that states that the windows must be replaced.

Commissioner stated that it seemed that there is a gap. This is a lead remediation contract, and the state's concern is different than the Commission's concerns. The Commission would like to see what will it take to remediate the lead and preserve these windows?

ACTION 1 of 2

Commissioner Simmons moved that:
Having duly reviewed the complete proposed scope of **Application HDC2026-00035 for 15091 Penrod**, and having duly considered the appropriateness thereof pursuant to Chapter 21 Article II of the 2019 Detroit City Code, and MCL 399.205 of the Local Historic Districts Act, the Commission determines the proposed replacement of 10 wood windows with muntins, replacement of a wood entry door and a wood storm door, and covering historic wood trim with aluminum coil stock WILL NOT BE APPROPRIATE according to the standards of review set forth in the state and local legislation, and therefore ISSUES a DENIAL,

as the proposed work fails to meet the Secretary of the Interior's Standards, specifically Standards:

2) *The historic character of a property shall be retained and preserved. The removal of historic materials or alteration of features and spaces that characterize a property shall be avoided*.
5) *Distinctive features, finishes, and construction techniques or examples of craftsmanship that characterize a historic property shall be preserved.*
6) *Deteriorated historic features shall be repaired rather than replaced. Where the severity of deterioration requires replacement of a distinctive feature, the new feature shall match the old in design, color, texture, and other visual qualities and, where possible, materials. Replacement of missing features shall be substantiated by documentary, physical, or pictorial evidence.*

And

Elements of Design # 3, 7, 8, 10 & 15

For the following reasons:

1. The 10 wood windows with muntins and the rear balcony's wood entry door and storm door are distinctive and historic character-defining features of the house. The application does not adequately substantiate that these existing historic features are deteriorated beyond repair. The hazards represented by lead paint can be abated via historic preservation treatments rather than outright replacement.
2. Removing or covering existing historic wood trim around doors and windows would alter the house's historic features and diminish its character.

Commissioner Machielse: SUPPORTED.

ROLL CALL:

Commissioner Franklin: Aye.
Commissioner Machielse: Aye.
Commissioner Marquez: Aye.
Commissioner Simmons: Aye.

MOTION PASSED, 4-0.

ACTION 2 OF 2

Commissioner Simmons moved: Having duly reviewed the complete proposed scope of **Application HDC2026-00035 for 15091 Penrod**, and having duly considered the appropriateness thereof pursuant to Chapter 21 Article II of the 2019 Detroit City Code, and MCL 399.205 of the Local Historic Districts Act, the Commission determines the remaining work items WILL BE APPROPRIATE according to the standards of review set forth in the state and local legislation, and therefore ISSUES a CERTIFICATE OF APPROPRIATENESS for the proposed work.

The Certificate of Appropriateness is issued with the following conditions:

1. Any historic wood trim and brick mold that exists will be preserved, repaired, and reused. If any wood trim is beyond repair, trim that matches the historic in material, profile, and craftsmanship may be used.
2. Samples of the black screen proposed will be shared with staff for review and approval.

Commissioner Machielse: SUPPORTED.

ROLL CALL:
Commissioner Franklin: Aye.
Commissioner Machielse: Aye.
Commissioner Marquez: Aye.
Commissioner Simmons: Aye.

MOTION PASSED, 4-0.

1000 Ste Anne & 2635 W Lafayette—HDC2026-00195—Ste Anne's Parish Complex HD—JR—Replace wood windows, infill basement window openings, reconsider conditions

Applicants Jessica Quijano and Eugene Hopkins, present and sworn in.

Ms Quijano wanted to address a couple items regarding staff's analysis and recommendations.

Regarding infill of masonry openings at basilica (Chapel) and at the rectory, both are located in a character-defining feature and they agree that they are character-defining but not as important as other historic features; the character-defining features are on a spectrum of significance. And these features are

secondary in importance. Too, they're not proposing to change the masonry openings—they would be the same size as they are, and often the windows in the openings are not historic. Proposed are deeper recesses than were proposed last time. Staff mentioned objecting to opaque material but the opaque material is the current situation, and these could be removed without damaging the historic material. Applicant addressed Standards and the proposal and discussed how the applicants believe they are meeting the Standards. They also mentioned that the school building has several similar infilled openings, and the Church does as well when the plaza and ADA ramp was built.

ACTION
Commissioner Marquez moved:
Having duly reviewed the complete proposed scope of **Application HDC2026-00195 for 1000 St. Anne & 2635 W. Lafayette**, and having duly considered the appropriateness thereof pursuant to Chapter 21 Article II of the 2019 Detroit City Code, and MCL 399.205 of the Local Historic Districts Act, the Commission determines the proposed project WILL BE APPROPRIATE according to the standards of review set forth in the state and local legislation, and therefore ISSUES a CERTIFICATE OF APPROPRIATENESS for the proposed work.

The Certificate of Appropriateness is issued with the following conditions:

- With respect to the three windows proposed for replacement at the basilica/church's sacristy area, staff will be afforded the opportunity to review and approve the final specifications and shop drawings for the new windows prior to their installation
- With respect to the replacement of brickmould at the rectory building, the applicant shall provide photo documentation of the brickmould for each window proposed for the new sashes to HDC staff upon the removal of the aluminum panning/prior to the installation of the new sashes. Staff shall be afforded the opportunity to review the condition of the brickmould and shall approve its replacement with new wood brickmould that matches the original if they determine that historic brickmould does not exist or if historic brickmould exists but is deteriorated beyond repair. If the documentation indicates that the historic brickmould remains beneath the current aluminum panning and staff determines that it is not deteriorated beyond repair, it shall be retained and repaired in kind where necessary.
- With respect to the basement windows proposed for infill, the infill will be recessed to achieve a shadow line, and the stone used in the construction will be colored differently than the original.

Commissioner Machielse: SUPPORTED.

ROLL CALL
Commissioner Franklin: AYE
Commissioner Machielse: AYE
Commissioner Marquez: AYE
Commissioner Simmons: AYE.

MOTION PASSED, 4-0.

ACTION
Commissioner Marquez moved:
Having duly reviewed the complete proposed scope of **Application HDC2026-00195 for 1000 St. Anne & 2635 W. Lafayette**, and having duly considered the appropriateness thereof pursuant to Chapter 21 Article II of the 2019 Detroit City Code, and MCL 399.205 of the Local Historic Districts Act, the

Commission determines the proposed work approved by COA# HDC2026-00107 WILL BE APPROPRIATE according to the standards of review set forth in the state and local legislation, and therefore ISSUES a CERTIFICATE OF APPROPRIATENESS for the proposed work.

The Certificate of Appropriateness is issued with the following conditions:

1. Prior to the issuance of the building permit pertaining to the work at the property's Parish Hall, the applicant shall provide drawings which outline details regarding the dimensions, materials and footprint of the proposed rear wall connector and screen wall addition to HDC staff for review and approval. The drawings must clearly indicate the dimensions, materials and footprint of the new wall and addition. The drawings must also clearly depict how the addition and wall will interact with Parish Hall and the Rectory building.
2. Prior to the issuance of the building permit pertaining to work at the property's Parish Hall, the applicant shall provide product cutsheets for the proposed replacement columns for the building's façade, second story, to HDC staff for review and approval.

Commissioner Machielse: SUPPORTED

ROLL CALL
Commissioner Franklin: AYE
Commissioner Machielse: AYE
Commissioner Marquez: AYE
Commissioner Simmons: AYE.

MOTION PASSED, 4-0.

405 E Ferry – HDC2026-00200 – East Ferry Avenue HD – BS – Replace slate tiles at gable ends

Applicant Cynthia Wolfe present online; sworn in.

Could she possibly take the tile to use from the east side between houses that people don't really see to repair/fill in on the other, more public side where tiles are broken or missing?

Commissioner asked if it is possible to source new, matching slate? Also, he doesn't think he has enough information about the replacement proposed DaVinci tile in terms of how it compares to the color, exposure, width, etc of the historic slate.

The DaVinci is close to the existing slate in terms of thickness. The historic slate is gray with a slight greenish tinge to it.

Commissioner stated that in order to apply the Secretary of the Interior's Standards for Rehabilitation, he would like to find a path to save all of it or at least understand what the options are so those options can be exhausted, and then an alternative could possibly be entertained. We have a quote for the DaVinci substitute product, and commissioner has questions about that product in terms of dimensionality and how it compares to the historic. Commissioner wants to understand the cost of real slate replacement for reference. Existing slate is about 6x 12 and the exposure is about 6 inches. Commissioner is concerned that because of the system's age, it will all begin failing en masse and some kind of replacement may be necessary. It would be good to have a complete replacement quote to compare the DaVinci quote with.

ACTION

Commissioner Machielse moved:
Having duly reviewed the complete proposed scope of **Application HDC2026-00200 for 405 E. Ferry**, and having duly considered the appropriateness thereof pursuant to Chapter 21 Article II of the 2019 Detroit City Code, and MCL 399.205 of the Local Historic Districts Act, the Commission determines the proposed application WILL NOT BE APPROPRIATE according to the standards of review set forth in the state and local legislation, and therefore ISSUES a DENIAL,

as the proposed work fails to meet the Secretary of the Interior's Standards, specifically Standards:

2) *The historic character of a property shall be retained and preserved. The removal of historic materials or alteration of features and spaces that characterize a property shall be avoided*.
5) *Distinctive features, finishes, and construction techniques or examples of craftsmanship that characterize a historic property shall be preserved.*
6) *Deteriorated historic features shall be repaired rather than replaced. Where the severity of deterioration requires replacement of a distinctive feature, the new feature shall match the old in design, color, texture, and other visual qualities and, where possible, materials. Replacement of missing features shall be substantiated by documentary, physical, or pictorial evidence.*

And

Elements of Design # 7, 8, 9 & 19

For the following reasons:

1. The existing slate tile does not appear to be deteriorated beyond repair.
2. The DaVinci Inspired slate tiles, made of a polypropylene-based product, are not a compatible replacement for a slate tile gable end roof. The replacement tiles should match the existing in size, shape, color, texture, exposure, and coursing.
    a. Vinyl and poly-products offer a plasticity and flat/thick appearance that does not adequately match the profile/dimensionality, authenticity, and appearance of historic slate tiles.

Commissioner Simmons: SUPPORTED.

ROLL CALL:

Commissioner Franklin: AYE
Commissioner Machielse: AYE
Commissioner Marquez: AYE
Commissioner Simmons: AYE

MOTION PASSED 4-0.

ACTION
Commissioner Machielse moved:

Having duly reviewed the complete proposed scope of **Application HDC2026-00200 for 405 E. Ferry**, and having duly considered the appropriateness thereof pursuant to Chapter 21 Article II of the 2019 Detroit City Code, and MCL 399.205 of the Local Historic Districts Act, the Commission determines that the proposed remaining work items WILL BE APPROPRIATE according to the standards of review set forth in the state and local legislation, and therefore ISSUES a CERTIFICATE OF APPROPRIATENESS for the proposed work.

The Certificate of Appropriateness is issued with the following condition:

1. The wood window's trim and sashes shall be finished with colors that are compatible within the Historic Districts' Color Chart System, subject to staff approval.

Commissioner Simmons: SUPPORTED

ROLL CALL:

Commissioner Franklin: AYE
Commissioner Machielse: AYE
Commissioner Marquez: AYE
Commissioner Simmons: AYE

MOTION PASSED 4-0

XIV CITY PROJECTS NOT SUBJECT TO PUBLIC HEARING

None

XV OLD BUSINESS

None

XVI NEW BUSINESS

2025 SHPO CLG Report—HDAB Deputy Directory Lisa DiChiera presented an overiew of the Certified Local Government Report for 2025.

Commissioner Marquez acknowledged audience member Finley Booth, who attended the meeting as a recent UDM Architecture grad.

XVII ADJOURNMENT

ACTION
Commissioner Simmons, supported by Commissioner Machielse, moved to adjourn, followed by a voice vote.
Chairperson Franklin adjourned the meeting at 7:50 PM.

470 MLK

HANDOUT DISTRIBUTED TO HDC 5/13/26

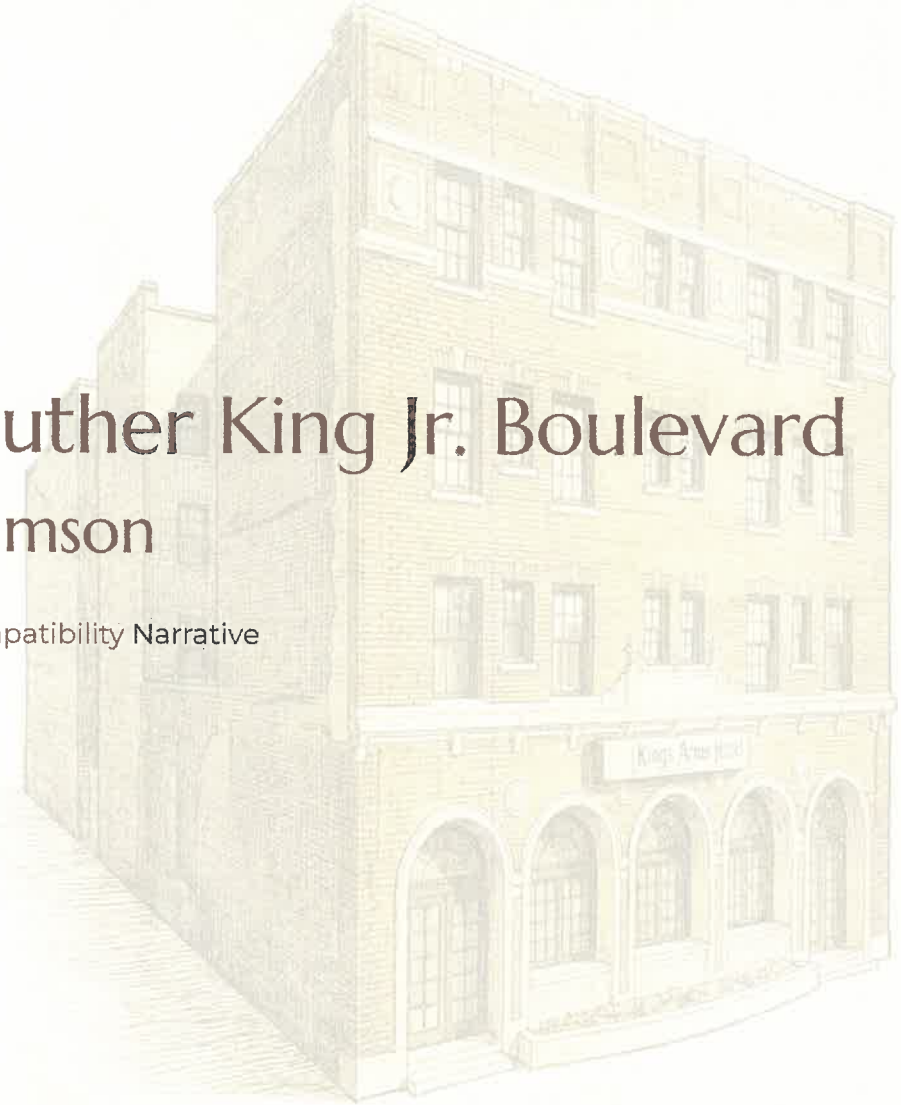

470 Martin Luther King Jr. Boulevard

Historic Hotel Stimson

Rehabilitation & Preservation Compatibility Narrative

Detroit, Michigan
May 2026

Made with GAMMA

Executive Summary

This rehabilitation narrative documents the historical context, existing conditions, preservation approach, and compatibility rationale associated with rehabilitation work completed at 470 Martin Luther King Jr. Boulevard in Detroit, Michigan, historically identified as the Hotel Stimson.

Constructed in 1926 as an apartment hotel within Detroit's historic Cass Corridor/Cass Farm district, the building has continuously functioned as affordable transient and short-term residential lodging for nearly a century.

The completed rehabilitation prioritized:

- Resident safety
- Continued occupancy
- Long-term building viability
- Preservation of affordable housing
- Retention of historic facade character
- Compatible rehabilitation of deteriorated building systems

Property Identification

Historic Name: Hotel Stimson

Current Name: King's Arms Hotel

Address: 470 MLK Jr. Blvd., Detroit MI 48201

Parcel No.: 02000734

Built: 1926

Construction: Masonry

Stories: Four

Current Use: Residential Hotel / Affordable SRO

District: Cass Farm Multiple Property

Made with GAMMA

Rehabilitation Priorities

The rehabilitation prioritized human safety, dignity, and continued shelter while preserving the building's historic character and its 100-year history of continuous affordable residential use.

Resident Safety

Support safe, continuous occupancy during the work.

Stewardship

Protect the building's historic character and long-term condition.

Affordable Use

Preserve the hotel's continued residential SRO function and uninterrupted affordable housing role.

Made with GAMMA

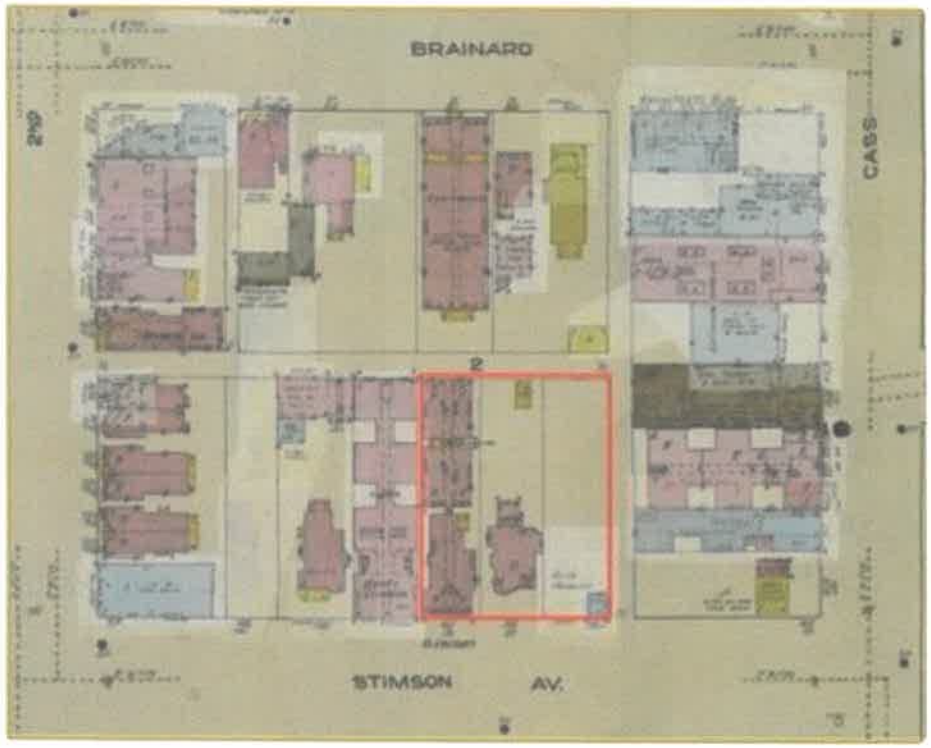

Sanborn Fire Insurance Map — "Hotel Stimson" highlighted in red.

Historic Context

Historic Sanborn Fire Insurance mapping identifies the property as the "Hotel Stimson" along Stimson Avenue, the historic street name prior to the corridor's later renaming as Martin Luther King Jr. Boulevard.

Constructed in 1926, the building reflects a common apartment hotel typology historically found throughout Detroit's Cass Corridor during the city's industrial expansion era.

These apartment hotels provided affordable furnished accommodations for:

- Industrial workers
- Transient laborers
- Single residents
- New arrivals to Detroit
- Working-class tenants requiring flexible urban housing

Nearly a century of continuous affordable residential use represents the building's most historically significant attribute.

Made with GAMMA

Existing Conditions

Existing conditions documentation revealed severe deterioration of original wood window assemblies beyond feasible repair.

Made with GAMMA

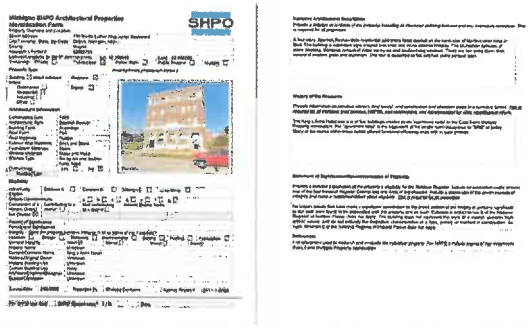

PM Environmental Survey — Section 106 Review Documentation

Window Investigation Findings

A reconnaissance-level architectural survey prepared during the Section 106 review process identified the windows as metal systems.

Subsequent construction investigation conducted during rehabilitation identified the original assemblies as deteriorated wood double-hung systems.

Field investigation during rehabilitation revealed:

- Original wood construction
- Extensive structural deterioration
- Rot beyond feasible repair
- Long-term moisture infiltration
- Significant operational failure

The original window systems could not reasonably be restored to provide safe, weather-tight, durable performance within an occupied affordable housing environment.

Made with GAMMA

Michigan SHPO Architectural Properties Identification Form

Property Overview and Location

Street Address	470 Martin Luther King Junior Boulevard				
City/Township, State, Zip Code	Detroit, Michigan, 48201				
County	Wayne				
Assessor's Parcel #	02000734				
Latitude/Longitude (to the 6th decimal point)	Lat: 42.345548		Long: -83.062223		
Ownership	Private ☐	Public-Local ☒	Public-State ☐	Public-Federal ☐	Multiple ☐

Property Type

Building ☒ select sub-type below Commercial ☐ Residential ☒ Industrial ☐ Other ☐	Structure ☒ Object ☐

(Insert primary photograph below.)

Architectural Information

Construction Date	1926	
Architectural Style	Spanish Revival	
Building Form	Accordion	
Roof Form	Flat	
Roof Materials	Rubber	
Exterior Wall Materials	Brick and Stone	
Foundation Materials	Stone	
Window Materials	Glass and Metal	
Window Type	Six-by-six and double-hung, fixed	
Outbuildings	Yes ☐	No ☒
Number/Type:		

Eligibility

Individually Eligible	Criterion A ☐	Criterion B ☐	Criterion C ☐	Criterion D ☐
Criteria Considerations:		a. ☐ b. ☐ c. ☐ d. ☐ e. ☐ f. ☐ g. ☐		
Component of a Historic District	Contributing to a district ☐	Non-contributing to a district ☐	Historic District Name	
Not Eligible ☒				

Area(s) of Significance						
Period(s) of Significance						
Integrity – Does the property possess integrity in all or some of the 7 aspects?						
Location ☐	Design ☐	Materials ☐	Workmanship ☐	Setting ☐	Feeling ☐	Association ☐
General Integrity:	Intact ☒	Altered ☐	Moved ☐	Date(s):		
Historic Name	Unknown					
Current/Common Name	King's Arms Hotel					
Historic/Original Owner	Unknown					
Historic Building Use	Unknown					
Current Building Use	Hotel					
Architect/Engineer/Designer	Unknown					
Builder/Contractor	Unknown					

Survey Date	3/28/2022	Recorded By	Chelsea Dantuma	Agency Report #	12411-1-0003

For SHPO Use Only	SHPO Concurrence?: Y / N	Date:

Narrative Architectural Description

Provide a detailed description of the property, including all character-defining features and any accessory resources. This is required for all properties.

A four-story, Spanish Revival-style residential apartment hotel located on the north side of Martin Luther King Jr. Blvd. The building is accordion style shaped with brick and stone exterior finishes. The foundation consists of stone blocking. Windows consist of metal six-by-six and double-hung windows. There are two entry doors that consist of modern glass and aluminum. The roof is classified as flat and has stone parapet caps.

History of the Resource

Provide information on previous owners, land use(s), and construction and alteration dates in a narrative format. This is required for all intensive level surveys, NRPQs, and nominations, and recommended for other identification efforts.

The King's Arms Hotel was one of five buildings labeled as an "apartment hotel" in the Cass Farm Multiple Property nomination. The "apartment hotel" is the equivalent of the single-room occupancy or "SRO" of today. Many of the rooms within these hotels offered furnished efficiency units with in-suite phones.

Statement of Significance/Recommendation of Eligibility

Provide a detailed explanation of the property's eligibility for the National Register. Include an evaluation under at least one of the four National Register Criteria and one Area of Significance. Include a discussion of the seven aspects of integrity and make a recommendation about eligibility. This is required for all properties.

No known events that have made a significant contribution to the broad pattern of our history or persons significant to our past were found to be associated with the property and as such, Criterion A and Criterion B of the National Register of Historic Places does not apply. The building does not represent the work of a master, possess high artistic values, and do not embody the distinctive characteristics of a type, period, or method of construction. As such, Criterion C of the National Register of Historic Places does not apply.

References

List references used to research and evaluate the individual property. For NRPQ's include copies of key documents.

Cass Farm Multiple Property nomination

Rehabilitation Strategy

- Continued occupancy
- Resident safety
- Long-term building viability
- Preservation of affordable housing
- Retention of historic facade composition
- Compatible replacement rather than exact material replication

Preserved Historic Character:

- Historic opening dimensions
- Window proportions
- Double-hung operation
- Overall facade rhythm
- Visual cadence of the elevations
- Historic residential character

Window replacement was completed during winter occupancy without displacement of residents or interruption of shelter.

Made with GAMMA

Production Documentation — Window Types W1 through W6

Six window types were documented to guide replacement work across 254 units. The rehabilitation retained original opening dimensions and preserved the facade rhythm.

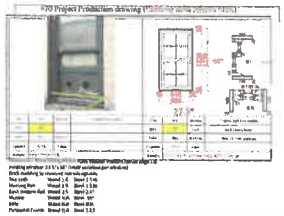

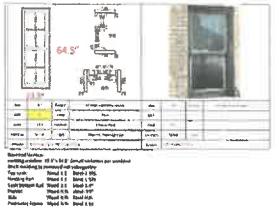

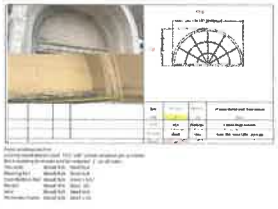

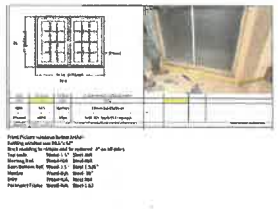

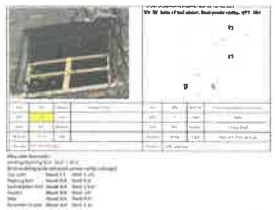

Type	Location	Dimensions	Notes
W-01	Bedroom	38"×70" | 127 units	Wood double-hung
W-02	Bathroom	27.5"×50" | 127 units	Failed glazing recorded
W-03	Basement	23.5"×64.5"	Rot found in original wood
W-04	Upper Front Arch	70.5"×38"	Arched profile preserved
W-05	Lower Picture	70.5"×52"	Double casements, opening retained
W-06	Alley Stairwell	55.5"×78.5"	Original dimensions maintained

Made with GAMMA

Before & After — Compatibility Analysis

The replacement windows reflect a compatible rehabilitation approach that preserves the building's historic character through careful attention to openings, proportions, and grid patterns.

The original windows were deteriorated wood assemblies and were replaced with compatible systems to support safety, habitability, and continued occupancy.

BEFORE — Prior to Rehabilitation
Front elevation, December 2, 2020

AFTER — Proposed Rehabilitation
Compatible fenestration, retained historic character

Retained Character-Defining Elements

Opening Dimensions

Original masonry openings remain the same across all 254 units.

Facade Rhythm

Window spacing and vertical alignment stay consistent.

Arched Geometry

Ground-floor arch profiles are preserved.

Masonry Envelope

Brick, stone, parapet, belt course, and medallions are retained and restored.

Made with GAMMA

Additional Revisions & Responsive Design Changes

- Ground-floor windows revised to casement configuration
- Gutters and downspouts to be painted
- Non-historic paint removed from original limestone elements
- Historically compatible entry doors selected
- Landscape architect consulted on screening and grade transitions
- Evergreen plantings and raised grading will screen stabilization elements
- Light well repairs revised to use matching brick and mortar
- Peeling paint in light wells to be removed, preserving masonry detailing

These revisions reflect the project team's continued commitment to collaborative preservation and historically compatible rehabilitation.

Made with GAMMA

Entry Door Rehabilitation

EXISTING CONDITIONS — Original entry doors

PROPOSED REPLACEMENT — Historically compatible entry systems

Historically compatible replacement entry systems were selected to reinforce the building's historic character while improving durability, security, and long-term operability.

Made with GAMMA

DISREGARD PER APPLICANT

Retaining Wall & Landscape Integration

EXISTING CONDITIONS — Exposed retaining wall

PROPOSED TREATMENT — Landscape screening and integration

Landscape improvements, raised grading, planter integration, and evergreen screening will minimize visibility of stabilization elements while preserving the historic retaining wall relationship to the streetscape.

Made with GAMMA

No Adverse Effect

The completed rehabilitation does not result in an adverse effect on the historic character of the property.

The project preserves:

- Historic massing
- Primary facade composition
- Window opening configuration
- Overall visual character
- Historic residential use
- Streetscape relationship
- Historic urban typology

Although replacement window materials differ from the original wood assemblies, the new systems maintain compatible proportions, operation, scale, and visual rhythm.

The rehabilitation avoided substantial alteration to character-defining exterior organization and ensured the continued preservation and occupation of the building.

Made with GAMMA

Secretary of the Interior's Standards — Compliance & Conclusion

1 **Standard 1 — Continued Historic Use**

470 MLK continues its historic use as a residential hotel/SRO serving working-class residents. Nearly 100 years of continuous affordable residential occupancy will continue, preserving the property's most significant historic feature.

2 **Standard 2 — Retention of Historic Character**

The brick and stone exterior, arched openings, stone parapet, belt course, medallions, and four-story massing remain intact. These features continue to define the building's residential character.

3 **Standard 6 — Replacement of Deteriorated Features**

Original wood window assemblies were found to be beyond repair because of rot, failed glazing, water intrusion, and freeze-thaw damage. Replacement was the compatible solution to maintain safety and weather protection.

4 **Standard 7 — Gentlest Means of Treatment**

Historic masonry was repaired without chemical treatment. Salvageable brick was reused, and the glass guardrail was designed to be reversible.

5 **Standard 9 — Compatible New Work**

The new glass guardrail is visually quiet, compatible in scale, and clearly modern. It remains subordinate to the historic building and does not alter the character of the site.

> The King's Arms Hotel — Historic Hotel Stimson — remains an important example of Detroit's early apartment hotel development. Its continued affordable residential use is the building's most meaningful historic attribute.

In conclusion, preservation succeeds when the building continues its historic residential function. This rehabilitation protects the property's character while sustaining affordable housing in Detroit's historic Cass Corridor and preserving a place of continuity for the neighborhood.

Submitted to: Detroit Historic District Commission | Coleman A. Young Municipal Center | 2 Woodward Ave., Suite 908, Detroit, MI 48226 | 313.224.3487

Property: 470 Martin Luther King Jr. Boulevard | Detroit, Michigan 48201 | Parcel 02000734

Made with GAMMA

SECRETARY STANDARDS COMPLIANCE

2 images below Showing original retaining wall

3 images below showing repaired wall and New limestone cap

Retaining Wall was deteriorated and required repair. Bricks salvaged and repurposed on on building.

CMU currently exposed, will be below grade once backfilled and parking lot poured on neighboring property. Limestone cap installed for weather proofing wall and for base to install new safety rail per city requirement.

- Historic masonry openings retained
- Existing façade rhythm maintained
- New window systems match original proportions
- Glass guardrail kept visually subordinate
- Emergency stabilization completed to protect occupant safety
- Temporary weatherization prevented further deterioration

EXISTING CONDITIONS

Weathered brick was surface coated in mortar and not salvageable. Repaired with CMU block for durability. Entire interior area to be painted and hide CMU block.

Existing masonry coated with non-salvageable mortar

Wood window systems deteriorated beyond repair

Water infiltration at retaining wall conditions

Unsafe site conditions required immediate stabilization

WINDOW TYPE W1

470 Project Production drawing (Drawing from Interior view)

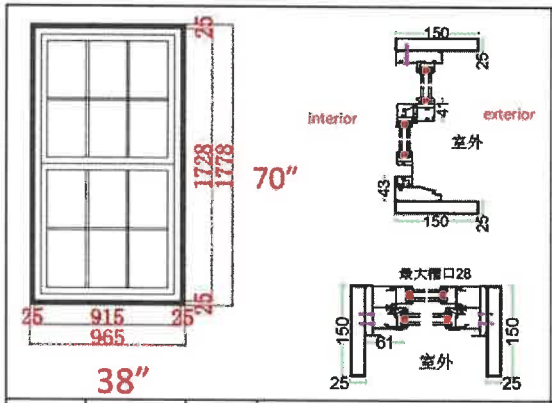

Item	W1	Products	83 series single hung window	Item	W1	Products	Wood
QTY	127	color	black Chinese brand	QTY	127	color	
Grids	YES	Hardware	5mm+9A+5mm+argon gas	Grids	NO	Hardware	
Flyscreen	NONE	Glass		Flyscreen	NONE	Glass	
Remarks	Customize 6"*1" aluminum frame, NFRC certificate			Remarks	NOT REPAIRABLE		

Bedroorms - Front Facing MLK to Have exterior Muntins (detail page 11)
existing window- 38"x 70" (small variation per window)
Brick molding to removed not salvageable.

Top sash:	Wood-1.5	Steel-1.535
Meeting Rail	Wood-1.5	Steel-1.535
Sash Bottom Rail	Wood-2.5	Steel-2.4"
Muntin	Wood-N/A	Steel-.59"
Stile	Wood-N/A	Steel-N/A
Perimeter Frame	Wood-N/A	Steel-1.53

83 Series Single Hung

Black Aluminum Finish

5mm + 9A + 5mm Argon Glass

Exterior Applied Muntins

Existing Opening: 38" x 70"

127 Total Units

WINDOW TYPE W2

470 Project Production drawing (Drawing from Interior view)

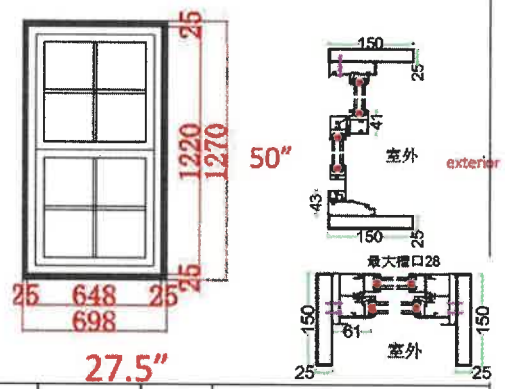

Item	W2	Products	Existing Wood window	Item	W2	Products	83 series single hung window
QTY	127			QTY	127	color	black Chinese brand
Grids	NO	Hardware		Grids	YES	Hardware	5mm+9A+5mm+argon gas
Flyscreen	NONE	Glass		Flyscreen	NONE	Glass	
Remarks	NOT REPAIRABLE			Remarks	Customize 6"*1" aluminum frame, NFRC certificate		

Bathrooms- Front Facing MLK to Have exterior Muntins (detail page 11)
existing window- 27.5"x 50" (small variation per window)
Brick molding to removed not salvageable.

Top sash:	Wood-1.5	Steel-1.535
Meeting Rail	Wood-1.5	Steel-1.535
Sash Bottom Rail	Wood-2.5	Steel-2.4"
Muntin	Wood-N/A	Steel-.59"
Stile	Wood-N/A	Steel-N/A
Perimeter Frame	Wood-N/A	Steel-1.53

Bathroom Front Elevation Windows

Existing Opening: 27.5" x 50"

Historic proportions retained

Black aluminum replacement systems

Exterior muntin replication at MLK façade

WINDOW TYPES W3 / W4 / W6

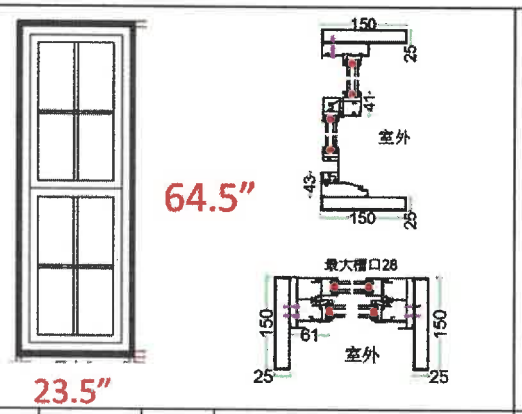

Item	W3	Products	83 series single hung window	Item	W4	Products	Exisiing Wood Window
QTY	4	color	black	QTY	3		
Grids	YES	Hardware	Chinese brand	Grids	NO		
Flyscreen	NONE	Glass	5mm+9A+5mm+argon gas	Flyscreen	NONE	Glass	
Remarks	' alumimun frame, NFRC certificate			Remarks	NOT REPAIRABLE		

Basemet Various-
existing window- 23.5"x 64.5" (small variation per window)
Brick molding to removed not salvageable.

Top sash:	Wood-1.5	Steel-1.535
Meeting Rail	Wood-1.5	Steel-1.535
Sash Bottom Rail	Wood-2.5	Steel-2.4"
Muntin	Wood-N/A	Steel-.59"
Stile	Wood-N/A	Steel-N/A
Perimeter Frame	Wood-N/A	Steel-1.53

- Basement and secondary openings
- Non-salvageable wood assemblies removed
- Thermally broken replacement systems
- NFRC certified glazing systems
- Existing masonry openings retained

ARCHED WINDOW SYSTEMS

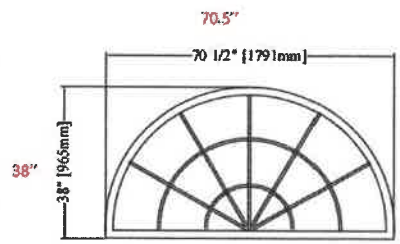

Item	WS-upper	Products	65 series thermal break fixed window
QTY	5	color	black
Grids	YES	Hardware	Chinese brand hardware
Flyscreen	NONE	Glass	5mm+20A+5mmLOWE+argon gas
Remarks	NFRC certificate		

Front windows Arches-
existing wood placer sized- 70.5"x38" (small variation per window)
Brick molding to remain and be restored -3" on all sides.

Top sash:	Wood-N/A	Steel-N/A
Meeting Rail	Wood-N/A	Steel-N/A
Sash Bottom Rail	Wood-N/A	Steel-1.535"
Muntin	Wood-N/A	Steel-.59"
Stile	Wood-N/A	Steel-N/A
Perimeter Frame	Wood-N/A	Steel-1.53

- Historic arch geometry preserved
- Low-E insulated glazing
- Black architectural finish
- Exterior muntin replication
- Existing brick molding retained and restored

WINDOW SYSTEM SPECIFICATIONS

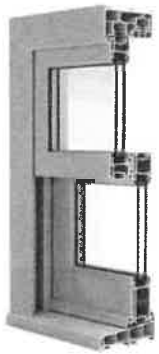

- PROFILE 6063-T5 ALUMINUM ALLOY
- 2.0MM THICKNESS
- BLACK COLOR
- BLACK COLOR STRIP BETWEEN GLAZE
- HIDDEN WATER DRAINAGE SYSTEM
- INTEGRATED HARDWARE
- NFRC STANDARD
- DOUBLE TEMPERED SAFETY GLASS
- LOW E COATING -DOUBLE PANE INSULATED
- 8MM+15A+8MM+LOW E+ARGON GLASS

6063-T5 Aluminum Alloy

2.0mm Frame Thickness

Integrated Drainage System

Double Tempered Safety Glass

Low-E Coating + Argon Gas

NFRC Standard Compliant

MUNTIN DETAILS

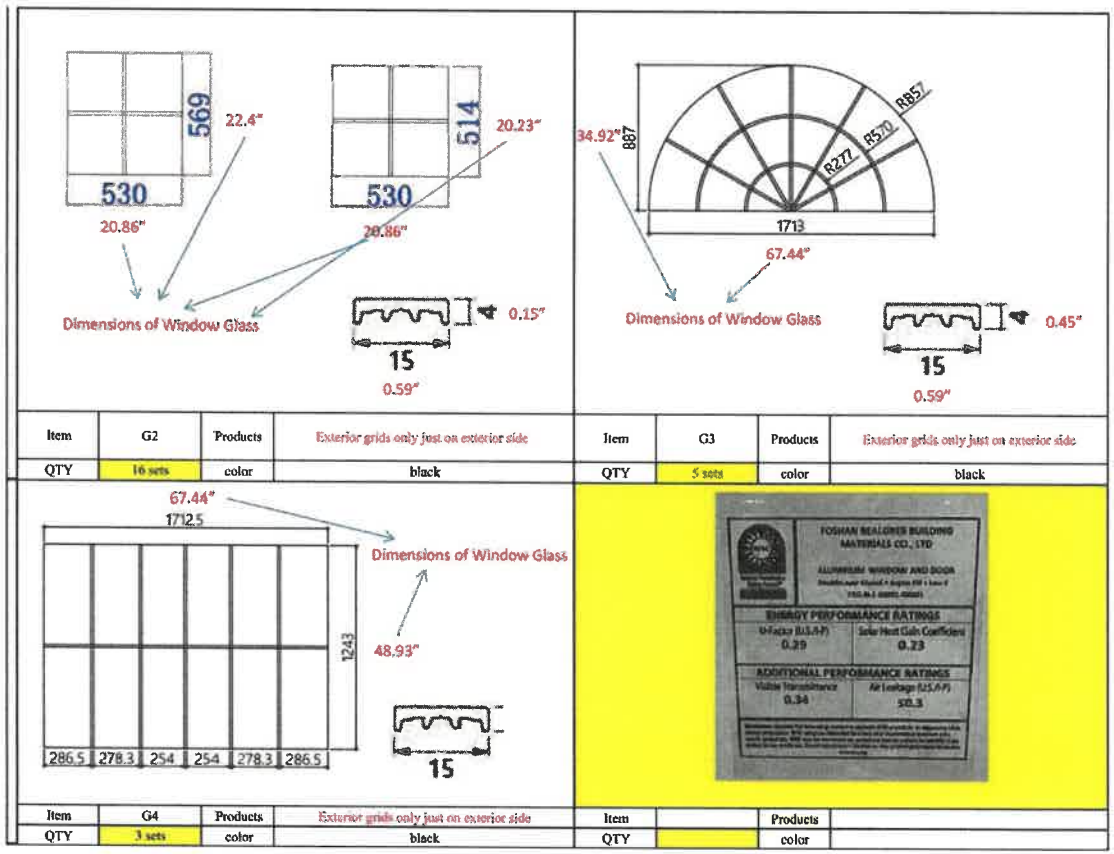

Item	G2	Products	Exterior grids only just on exterior side
QTY	16 sets	color	black

Item	G3	Products	Exterior grids only just on exterior side
QTY	5 sets	color	black

Item	G4	Products	Exterior grids only just on exterior side
QTY	3 sets	color	black

Item		Products	
QTY		color	

- Exterior applied muntin systems
- Front-facing MLK elevations only
- Historic grid spacing replicated
- Black finish coordinated with window package

RETAINING WALL RESTORATION

2 images below Showing original retaining wall

3 images below showing repaired wall and New limestone cap

Retaining Wall was deteriorated and required repair. Bricks salvaged and repurposed on on building.

CMU currently exposed, will be below grade once backfilled and parking lot poured on neighboring property. Limestone cap installed for weather proofing wall and for base to install new safety rail per city requirement.

- Existing retaining wall deteriorated beyond repair
- Brick salvaged and reused where feasible
- Limestone coping added for weather protection
- Frameless glass guardrail proposed above wall
- CMU concealed below future grade conditions

GLASS GUARDRAIL SYSTEM

Rendered image of proposed Railing on existing wall

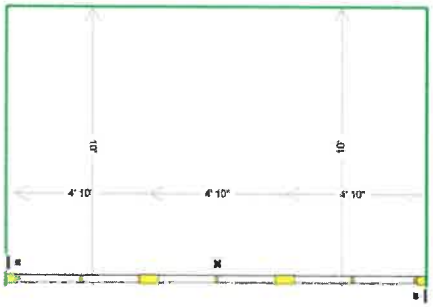

- Tempered laminated glass panels
- Black steel cap rail
- Mounted behind existing retaining wall
- Maintains visibility of historic masonry
- Required for current life safety compliance